Exit Devices

Every Hager exit device is designed and engineered to assure you and your customers years and years of superior performance in a variety of commercial applications. Hager exit devices use fewer moving parts, are constructed with high quality materials and are backed by industry leading warranties.

All Hager exit devices meet or exceed accepted U.S. domestic and international standards. All are UL listed for panic or fire-rated hardware and comply with ANSI A117.1 for accessible buildings and facilities. Many models are also certified for Hurricane Resistant applications.

Hager exit devices were designed with ease of installation in mind. All are non-handed and packaged for convenience and versatility with thru-bolts, slotted strikes, and both wood and machine screws in every box. Minimal door prep is needed with Hager exit device escutcheon trim with the locking mechanism built inside.

Table of Contents

4500 Series Heavy Duty Commerical 3
Compliance and Certifications 4
General Information 5
Device Profiles 6
How to Order 7
Devices 8
Dummy Pushpad 18
Alarm Kit 19
Electric Modifications 20
Escutcheon Trim for Rim and Vertical Rod Devices 21
Escutcheon Trim for Mortise Device 24
Pull Plate Trim 26
Strikes 27
Accessories 28

4600 Series Narrow Heavy Duty Commerical 31
Compliance and Certifications 32
General Information 33
Device Profile 34
How to Order 35
Rim Device 36
Alarm Kit 38
Electric Modifications 39
Escutcheon Trim 40
Strikes 42
Accessories 42

4700 Series Standard Duty 43
Compliance and Certifications 44
General Information 45
Device Profile 46
How to Order 47
Devices 48
Escutcheon Trim 50
Key-In-Lever Trim 52
Pull Plate Trim 54
Raised Lip Trim 55
Strikes 55
Accessories 56

4900 Series Mullions 59
How to Order 60
Keyed Removable Mullion 61
Non-Keyed Removable Mullion 62
Strikes 63
Stabilizer Kit 63
Accessories 63

4500 Series

HEAVY DUTY COMMERCIAL APPLICATION

Hager 4500 Series Exit Devices are ideal for use in heavy duty commercial applications including office buildings, medical facilities, schools, and hospitality structures. The Hager 4500 Series is designed and engineered to provide a lifetime of superior performance on doors in heavy duty commercial applications. Properly applied and maintained Hager 4500 Series Exit Devices and Trim are backed by a lifetime warranty, providing peace of mind from distributor to building owner. Go to www.hagerco.com for specific warranty conditions.

Hager 4500 Series Exit Devices are BHMA certified Grade 1 and meet Life Safety codes and Fire Safety requirements. The 4500 Series Rim and Surface Vertical Rod devices meet ANSI requirements to be listed as Severe Windstorm Components and are approved for High Velocity Hurricane Zone areas.

Extruded aluminum construction, stainless steel push bar cover, die cast caps and covers, and dead locking stainless steel Pullman type latchbolts provide premium security and performance at value pricing.

4500 SERIES - COMPLIANCE & CERTIFICATIONS

4500 SERIES DEVICES

	RIM	SVR	LBR	CVR	CLB	MOR
BHMA Certified ANSI A156.3 Grade 1	YES	YES	YES	YES	YES	YES
UL305 Listed for Panic Hardware	YES	YES	YES	YES	YES	YES
UL10C Positive Pressure Rated	YES	YES	YES	YES	YES	YES
UL10B Neutral Pressure Rated	YES	YES	YES	YES	YES	YES
Complies with ANSI A117.1 for Accessible Buildings and Facilities	YES	YES	YES	YES	YES	YES
ANSI A 250.13 Severe Windstorm Resistant Component	YES	YES	---	---	---	---
Miami Dade NOA #11-1219.14	YES	YES	---	---	---	---

4500 SERIES FIRE-RATED DEVICES

	RIM F	SVR F	LBR F	CVR F	CLB F	MOR F
UL/cUL Listed for "A" Label Door Up to and Including...	3 HR 4'X8'	3 HR 4'X10'	---	3 HR 4'X10'	---	3 HR 4'X8'
Rim with Fire-rated Removable Mullion 4900UF UL/cUL Listed and Warnock Hersey Listed for "A" Label Door Up to and Including...	3 HR 8'X8'	---	---	---	---	---
VR X VR SAME DIRECTION* UL/cUL Listed for "A" Label Door Up to and Including...	---	90 MIN 8'X10'	90 MIN 8'X8'	90 MIN 8'X10'	90 MIN 8'X8'	---
VR X VR Double Egress UL/cUL Listed for "A" Label Door Up to and Including...	---	3 HR 8'X10'	3 HR 8'X8'	3 HR 8'X10'	3 HR 8'X8'	---

*Currently, no door manufacturer offers a listing over 90 minutes with doors swinging same direction. Consult wood door manufacturers for current UL listings.

4500 SERIES - GENERAL INFORMATION

Installation Made Easy
For the convenience of our customers, Hager Companies introduced several key features to the exit device market:

- Thru-bolts are included with every model. Wood and machine screws are also provided standard in every package.
- Slotted strikes speed up installation, allowing the installer to make easy adjustments to align the latch to the strike.
- Non-handed device offers added versatility and means less inventory.
- Escutcheon trim is surface mounted with the locking mechanism built inside, reducing door preparation and installation time by requiring fewer holes in the door.

Shim Kits
Shim kits are available for devices on doors with glass bead kits or other interfacing moldings. Each kit contains two 1/8" (3.2 mm) shims and the appropriate longer fasteners.

Dogging
Cylinder dogging or less dogging are available to replace the standard hex key dogging on panic exit devices. For cylinder dogging, specify CD on order or purchase 4926 for retrofit applications. Unit requires 1-1/8" mortise cylinder (part number 3902) with standard cam. For less dogging, specify LD on order.

Sizing
The exit device is cut for 36" (914 mm) and 48" (1219 mm) wide doors. For other door widths, cut exit device to appropriate length. Recommended overall length of exit device is equal to the door width minus four inches. The surface vertical rod devices are supplied for an 84" (2134 mm) opening standard, but can be ordered for a 96" (2438 mm) opening. Extension rods are available to accommodate openings taller than 96" (2438 mm) and up to 120" (3048 mm).

Trim Functions	Part Number	Function Description	ANSI Number
Blank Escutcheon	45BE, 45MB	Always operable (Passage)	14
Cylinder Escutcheon	45CE, 45MC	Key locks or unlocks lever	08
Dummy	45DT, 45MD 45PD	Pull when device is dogged down	02
Night Latch	45NL, 45MN 45PN	Key retracts latchbolt	03
Cylinder Thumbpiece	45PT	Key locks or unlocks thumbpiece	05
Electrified Trim	45ET EL 45ET EU	Fail safe Fail secure	E05 E06

Applications

Single Door (Rim Device)

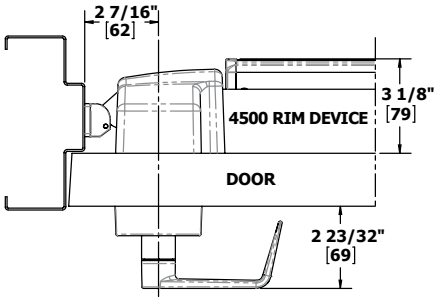

Double Door with Mullion (Rim x Rim)

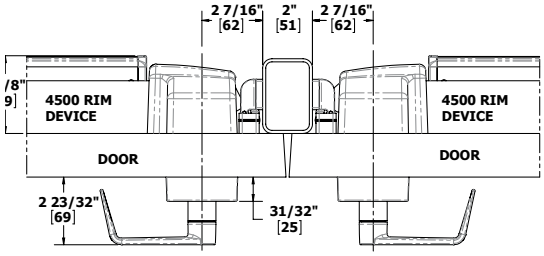

Double Door (SVR x SVR)

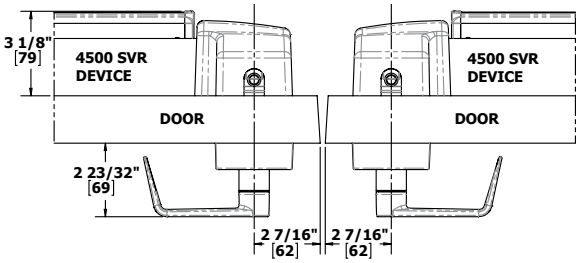

Double Door (SVR x Rim)

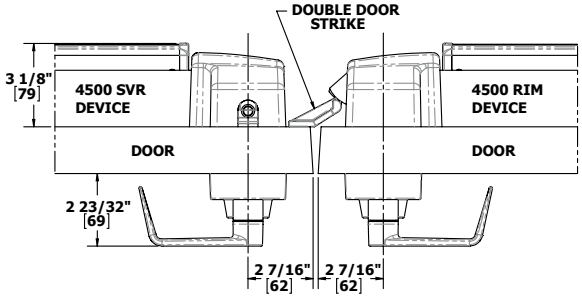

4500 SERIES - DEVICE PROFILES

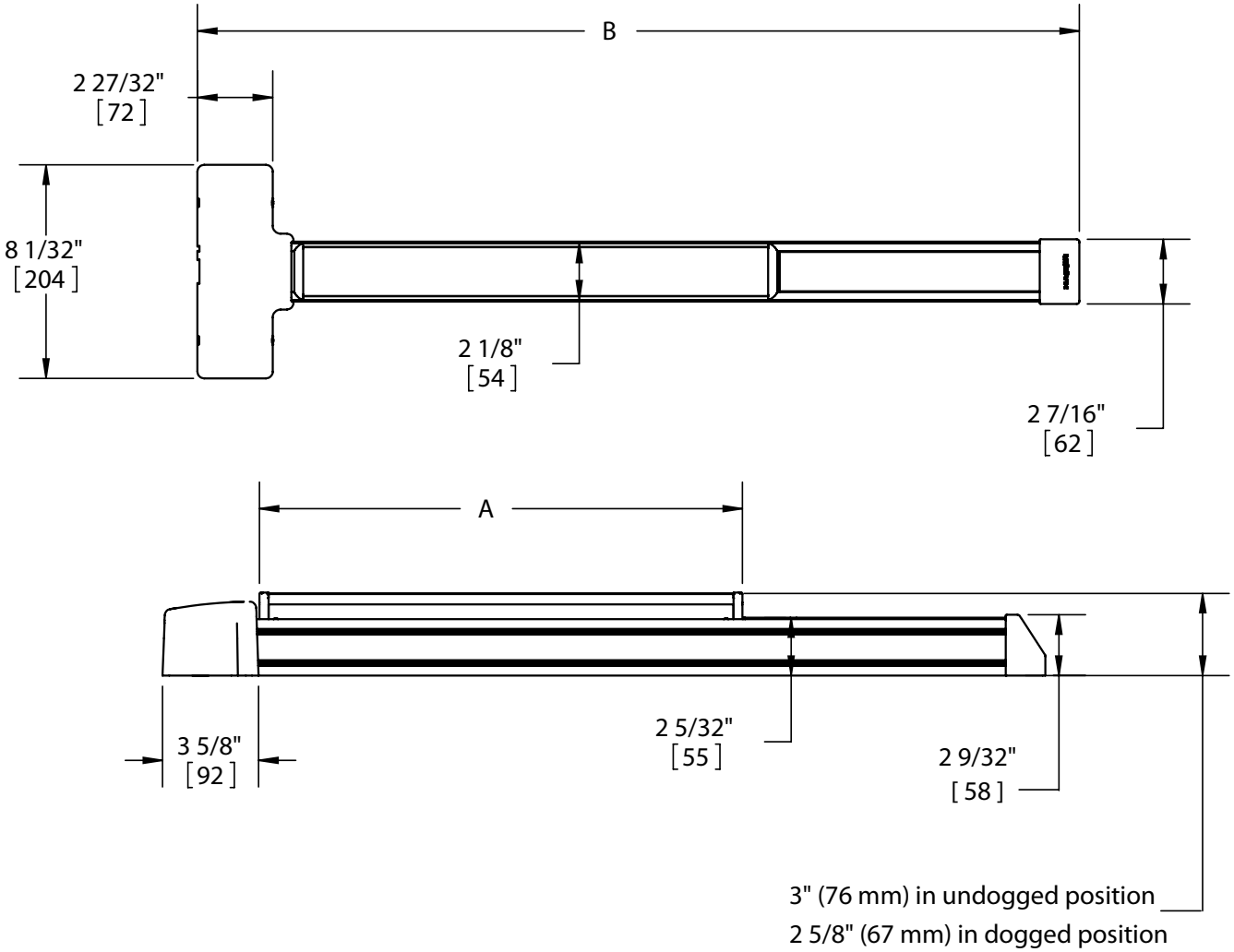

4500 SERIES	A	B
4500 PANIC - 36"	18 5/32"(461mm)	33 5/32"(842mm)
4500 FIRE -36"		
4500 PANIC - 48"	24"(611mm)	44"(1121mm)
4500 FIRE - 48"		

4500 SERIES - HOW TO ORDER

4500 SERIES EXIT DEVICE

4501 **RIM** **F** **36”** **US3** **1-3/4”** **ELR**

Product Group
4500 Series, Grade 1

Type
- RIM - Rim Device
- SVR - Surface Vertical Rod
- LBR - Surface Vertical Rod Less Bottom Rod *
- CVR - Concealed Vertical Rod
- CLB - Concealed Vertical Rod Less Bottom Rod *
- DMY - Dummy Push Pad
- MRT - Mortise Device (MC, MB, MD)
- MRTN - Mortise Night Latch Device (MN)

Rating
- FR - Fire-Rated
- 0 - Non-Fire Rated
- CD - Cylinder Dogging
- L - Less Dogging
- WR - Windstorm Rated
- W - Windstorm and Fire-Rated

Door Size**
36”
48”
36” x 84”
36” x 96”
48” x 84”
48” x 96”

Finish
US3
US4
US10
US10B
US26
US26D
US32D
BLK****

Door Thickness
1-5/8”
1-3/4”
2”
2-1/2”
3”

Electric Modifications
- AI - Authorized Ingress ***
- ALK - Alarm Kit
- ALL - Alarm Kit w/ Tamper Switch and Latch Monitor
- ALM - Alarm Kit w/ Latch Monitor
- ALT - Alarm Kit w/ Tamper Switch
- ED - Electric Dogging
- EDRX - Electric Dogging w/ Request to Exit
- ELR - Electric Latch Retraction
- ELRX - Electric Latch Retraction w/ Request to Exit
- LM - Latchbolt Monitor ***
- RX - Request to Exit
- RX2 - Dual Request to Exit
- RXAI - Request to Exit w/ Authorized Ingress ***
- RXLM - Request to Exit w/ Latchbolt Monitor ***
- MLR - Motor Driven Electric Latch Retraction
- MLRX - Motor Driven Electric Latch Retraction w/ Request to Exit

*Fire-rated LBR and CLB devices must be ordered in pairs of vertical rod devices or can be used in conjunction with an approved automatic or constant latching flush bolt. When ordering pairs, specify one device LBR and second device LBR with fire bolt, for example: 4501 LBR Fire 36” x 84” plus 4501 LBR Fire 36” x 84” EO with bolt -OR- 4501 LBR Fire 36” x 84” plus an approved automatic or constant latching flush bolt. 24” door size available (Extended lead-time). *** Not available on Mortise Exit Devices

4500 SERIES TRIM

45 **CE** **ARC** **US3** **1-3/4”** **EL24**

Product Group
45 - 4500 Series, Grade 1

Trim/Function
- BE - Blank Escutcheon Function 14, always operable
- CE - Cylinder Escutcheon Function 08, key locks/unlocks
- DT - Dummy Trim Function 02, pull when dogged down
- ET - Electric Escutcheon Trim
- NL - Night Latch (1-3/4” to 2-1/2” doors) Function 03, key retracts latchbolt
- PD - Pull Plate Dummy Trim (Not available for CVR device) Function 02, pull when dogged down
- PN - Pull Plate Night Latch (Not available for CVR device) Function 03, key retracts latchbolt
- PT - Thumbpiece Entrance (Not available for CVR device) Function 05, key locks or unlocks thumbpiece
- VR - Vandal Resistant
- MB - Mortise Blank Escutcheon (14)*
- MC - Mortise Cylinder Escutcheon (08) *
- MD - Mortise Dummy Trim (02) *
- MN - Mortise Night Latch (03) *

Lever Style
- ARC - Archer
- AUG - August
- WLM- William
- WTN - Withnell
- CHA - Charles
- JHN - Johnston**
- JOS- Joshua
- LOU - Louis
- WRN - Warren**

Finish
US3
US4
US10
US10B
US26
US26D
US32D (pull plate trim only)
BLK****

Door Thickness
1-5/8”
1-3/4”
2”
2-1/2”
3”

Options
- EL12- Fail Safe, 12 Volt ***
- EL24 - Fail Safe, 24 Volt ***
- EU12- Fail Secure, 12 Volt ***
- EU24 - Fail Secure, 24 Volt ***
- TW - Tactile Warning
- A- Antimicrobial Coating (US26D and US32D only)

* Mortise trim does not match centerline of other 4500 series trim. Cannot be used with 4500 Series Rim or Vertical Rod devices.

** Johnston and Warren lever designs are handed - specify LHR/RH or RHR/LH when ordering.

••• Not available on Mortise Exit trim

**** Extended lead time for flat black finish.

Notes:
1. Mortise cylinder 3902 is required for use with cylinder escutcheon trim and pull plate with thumbpiece trim and is sold separately.
2. Rim cylinder with long tailpiece 3901 is required for use with night latch trim and is sold separately.
3. For more cylinder information, please refer to Cylinder, Core & Keying in the Locks section of the catalog.
4. If using shim kit, specify total door thickness including shims.
5. For ET trim, must specify Fail Safe (EL) or Fail Secure (EU) and 12 or 24 volt.

HAGER COMPANIES

4500 SERIES - GRADE 1 RIM DEVICE

WARRANTY | Lifetime warranty

FEATURES

Certification:	BHMA Certified Grade 1 and meets life safety codes and fire-safety requirements. See charts on page 4 for details and options.
Covers:	Stainless steel, zinc
Cover Tube:	Aluminum
Dogging:	• Hex key dogging standard on panic-rated devices • Less dogging available on panic-rated devices, specify LD • Cylinder dogging available on panic-rated devices, specify CD (3902 1-1/8" (29 mm) mortise cylinder sold separately)
End Caps:	• Zinc • Flush end cap option available
Fasteners:	• Wood and machine screws • Thru-bolts supplied standard
Latchbolt:	3/4" (19 mm) throw, pullman type with automatic dead-latching, stainless steel
Strikes:	• Stainless steel with stainless steel pin and roller - included standard with panic device • Solid stainless steel - included standard with fire-rated device • Surface applied to frame with slotted holes for easy adjustment • Double door strike for use with surface vertical rod and rim device available

SPECIFICATIONS

Door Thickness:	1-3/4" (44 mm) - Standard up to 3", except with night latch (NL) which is 2-1/2"
Door Width:	• 36" (914 mm) field sizeable to 30" (762 mm) panic-rated door and 28" (711 mm) fire-rated door • 48" (1219 mm) field sizeable to 36" (914 mm) panic- or fire-rated door
Projection:	• 3" (76 mm) in undogged position • 2-5/8" (67 mm) in dogged position
Stile Width:	• 5-3/8" (137 mm) - minimum stile width required for single door and 5/8" (16 mm) stop • 4-7/8" (124 mm) - minimum stile width required for double door x surface vertical rod with double door strike • 5-3/4" (146 mm) - minimum stile width required for double doors with 2" (51 mm) mullion • All stile widths are measured from door edge.
Notes:	Recommended for use on appropriately reinforced doors

TRIM

- 4500 Series excutcheon trim for rim device is surface mounted with a variety of lever options (pp. 22-23)
- Pull plate trim
- Vandal resistant
- Rim cylinder x optional pull

FINISHES

- US3, US4, US10, US10B, US26, US26D, US32D, BLK
- Trim not available in US32D
- Anti-Microbial available with US26D, US32D

4500 SERIES - GRADE 1 RIM DEVICE - ELECTRIFIED

WARRANTY
- One-year on electrified components
- Lifetime on hardware components

FEATURES
Same as 4500 Series Rim Device

SPECIFICATIONS

Door Width:
- 36” (914 mm) field sizeable to 30” (762 mm) panic-rated door and 28” (711 mm) fire-rated door for devices with any monitoring switches
- 48” (1219 mm) field sizeable to 36” (914 mm) panic- or fire-rated door for devices with any monitoring switches
- 36” field sizeable to 34” door minimum for devices with motorized electric latch retraction or delayed egress
- 36” door minimum for devices with solenoid electric latch retraction, electric dogging or alarm kit
- 48” field sizeable to 42” door minimum for devices with solenoid, electric dogging or alarm kit
- 48” field sizeable to 40” door minimum with motorized electric latch retraction or delayed egress

FUNCTIONS
- ELR - Electric Latch Retraction
- ED - Electric Dogging
- RX - Request to Exit (field installation kit 2-649-5001)
- RX2 - Dual Request to Exit
- ELRX - Electric Latch Retraction with Request to Exit
- EDRX - Electric Dogging with Request to Exit
- ALK - Alarm Kit (kit 4940, tamper switch 2-649-1090)
- AI - Authorized Ingress
- RXAI - Request to Exit with Authorized Ingress
- LM - Latchbolt Monitor (2-649-0168)
- RXLM - Request to Exit with Latchbolt Monitor
- MLR - Motor Driven Electric Latch Retraction (field installation kit 2-649-5007)
- MLRX - Motor Driven Electric Latch Retraction with Request to Exit
- DE - Delayed Egress (must order wall mount controller 2-679-0630 separately)
- OBDE - Onboard Delayed Egress (Requires 1-1/8” - 1 3/8” length, 3978 Cloverleaf or equivalent tailpiece required)

Electrical Specifications and Wire Requirements - See 4500 Series Electric Modifications page 20.

4500 SERIES - GRADE 1 SURFACE VERTICAL ROD DEVICE

WARRANTY | Lifetime warranty

FEATURES

Certification:	BHMA Certified Grade 1 and meets life safety codes and fire-safety requirements. See charts on page 4 for details and options.
Covers:	Stainless steel, zinc
Cover Tube:	Aluminum
Dogging:	• Hex key dogging standard on panic-rated devices • Less dogging available on panic-rated devices, specify LD • Cylinder dogging is available on panic-rated devices, specify CD (3902 1-1/8" (29 mm) mortise cylinder sold separately)
End Caps:	• Zinc • Flush end cap option available
Fasteners:	• Wood and machine screws • Thru-bolts supplied standard
Latchbolt:	• Top - 1/2" (13 mm) throw, pullman type with automatic dead-latching, stainless steel • Bottom - 1/2" (13 mm) throw, pullman type, held retracted during door swing, stainless steel
Strikes:	• Stainless steel with stainless steel pin and roller - included standard with panic device • Solid stainless steel - included standard with fire-rated device • Surface applied to frame with slotted holes for easy adjustment • 10' (3048 mm) fire-rated device requires strike and hook kit, 4912 for top strike • Double door strike for use with surface vertical rod and rim device available

SPECIFICATIONS

Door Thickness:	1-3/4" (44 mm) - Standard up to 3", except with night latch (NL) function which is 2-1/2"
Door Width:	• 36" (914 mm) field sizeable to 30" (762 mm) panic-rated door and 28" (711 mm) fire-rated door • 48" (1219 mm) field sizeable to 36" (914 mm) panic- or fire-rated door
Projection:	• 3" (76 mm) in undogged position • 2-5/8" (67 mm) in dogged position
Vertical Rods:	• Rods for 7' (2134 mm) doors - 33-1/4" (845 mm) top rod length • Rods for 8' (2438 mm) doors - 45-1/4" (1149 mm) top rod length • Extension rods kits available, 2' (610 mm) or 3' (914 mm) for doors over 7'
Stile Width:	• 5-3/8" (137 mm) - Minimum stile width required for single door and 5/8" (16 mm) stop • 4-7/8" (124 mm) - Minimum stile width required for double doors • 4-7/8" (124 mm) - Minimum stile width required for double door x Rim Device with double door strike • All stile widths are measured from door edge
Notes:	• Center line prep is 40". If door prep elevation is lower, a longer top rod will need to be ordered. • Recommended for use on appropriately reinforced doors

TRIM

- 4500 Series escutcheon trim for vertical rod device is surface mounted with variety of lever options (pp. 22-23)
- Pull plate trim (excluding 45PT)
- Vandal resistant
- Rim cylinder x optional pull

FINISHES

- US3, US4, US10, US10B, US26, US26D, US32D, BLK
- Trim is not available in US32D
- Anti-microbial available with US26D, US32D

4500 SERIES - GRADE 1 SURFACE VERTICAL ROD DEVICE - LESS BOTTOM ROD (LBR)

WARRANTY Lifetime warranty

FEATURES

Certification: BHMA Certified Grade 1 and meets life safety codes and fire-safety requirements.
See charts on page 4 for details and options.

Covers: Stainless steel, zinc

Cover Tube: Aluminum

Dogging:
- Hex key dogging standard on panic-rated devices
- Less dogging available on panic-rated devices, specify LD
- Cylinder dogging is available on panic-rated devices, specify CD (3902 1-1/8" (29 mm) mortise cylinder sold separately)

End Caps:
- Zinc
- Flush end cap option available

Fasteners:
- Wood and machine screws
- Thru-bolts supplied standard

Latchbolt: Top - 1/2" (13 mm) throw, pullman type with automatic dead-latching, stainless steel

Strikes:
- Stainless steel with stainless steel pin and roller - included standard with panic device
- Solid stainless steel - included standard with fire-rated device
- Surface applied to frame with slotted holes for easy adjustment
- Double door strike for use with surface vertical rod and rim device available

SPECIFICATIONS

Door Thickness: 1-3/4" (44 mm) - Standard up to 3", except with night latch (NL) function escutcheon trim which is 2-1/2"

Door Width:
- 36" (914 mm) field sizeable to 30" (762 mm) panic-rated door and 28" (711 mm) fire-rated door
- 48" (1219 mm) field sizeable to 36" (914 mm) panic- or fire-rated door

Projection:
- 3" (76 mm) in undogged position
- 2-5/8" (67 mm) in dogged position

Vertical Rods:
- Rods for 7' (2134 mm) doors - 33-1/4" (845 mm) top rod length
- Rods for 8' (2438 mm) doors - 45-1/4" (1149 mm) top rod length
- Extension rod kits available, 2' (610 mm) or 3' (914 mm) for doors over 7'

Stile Width:
- 5-3/8" (137 mm) - Minimum stile width required for single door and 5/8" (16 mm) stop
- 4-7/8" (124 mm) - Minimum stile width required for double doors
- 4-7/8" (124 mm) - Minimum stile width required for double doors x rim device with double door strike
- All stile widths are measured from door edge

Notes:
- Hole plug for head cover included standard
- Recommended for use on appropriately reinforced doors
- A spring loaded fire bolt 2-649-0166 must be used on fire-rated LBR devices used on a pair of doors to ensure the device's fire rating

TRIM
- 4500 Series escutcheon trim for vertical rod device is surface mounted with a variety of lever options (pp. 22-23)
- Pull plate trim (excluding 45PT)
- Vandal resistant
- Rim cylinder x optional pull

FINISHES
- US3, US4, US10, US10B, US26, US26D, US32D, BLK
- Trim is not available in US32D
- Anti-Microbial available with US26D, US32D

4500 SERIES - GRADE 1 SURFACE VERTICAL ROD/LBR DEVICES - ELECTRIFIED

WARRANTY

- One-year on electrified components
- Lifetime on hardware components

FEATURES

Same as 4500 Series SVR Device

SPECIFICATIONS

Door Width:

- 36" (914 mm) field sizeable to 30" (762 mm) panic-rated door and 28" (711 mm) fire-rated door for devices with any monitoring switches
- 48" (1219 mm) field sizeable to 36" (914 mm) panic- or fire-rated door for devices with any monitoring switches
- 36" field sizeable to 34" door minimum for devices with motorized electric latch retraction or delayed egress
- 36" door minimum for devices with solenoid electric latch retraction, electric dogging or alarm kit
- 48" field sizeable to 42" door minimum for devices with solenoid, electric dogging or alarm kit
- 48" field sizeable to 40" door minimum with motorized electric latch retraction or delayed egress

FUNCTIONS

- ELR - Electric Latch Retraction
- ED - Electric Dogging
- RX - Request to Exit (field installation kit 2-649-5001)
- RX2 - Dual Request to Exit
- ELRX - Electric Latch Retraction with Request to Exit
- EDRX - Electric Dogging with Request to Exit
- ALK - Alarm Kit (kit 4940, tamper switch 2-649-1090)
- AI - Authorized Ingress
- RXAI - Request to Exit with Authorized Ingress
- LM - Latchbolt Monitor (2-649-0168)
- RXLM - Request to Exit with Latchbolt Monitor
- MLR - Motor Driven Electric Latch Retraction (field installation kit 2-649-5007)
- MLRX - Motor Driven Electric Latch Retraction with Request to Exit
- DE - Delayed Egress (must order wall mount controller 2-679-0630 separately)
- OBDE - Onboard Delayed Egress (Requires 1-1/8" - 1 3/8" length, 3978 Cloverleaf or equivalent tailpiece required)

Electrical Specifications and Wire Requirements - See 4500 Series Electric Modifications page 20.

4500 SERIES - GRADE 1 CONCEALED VERTICAL ROD

WARRANTY | Lifetime warranty

FEATURES

Certification:	BHMA Certified Grade 1 and meets life safety codes and fire-safety requirements. See charts on page 4 for details and options.
Covers:	Stainless steel, zinc
Cover Tube:	Aluminum
Dogging:	• Hex key dogging standard on panic-rated devices • Less dogging available on panic-rated devices, specify LD • Cylinder dogging is available on panic-rated devices, specify CD (3902 1-1/8" (29 mm) mortise cylinder with standard cam sold separately)
End Caps:	• Zinc • Flush end cap option available
Fasteners:	• Wood and machine screws • Thru-bolts supplied standard
Latchbolt:	• Top - 1/2" (13 mm) throw, pullman type with automatic dead-latching, stainless steel • Bottom - 1/2" (13 mm) throw, pullman type, held retracted during door swing, stainless steel
Strikes:	• Stainless steel with stainless steel pin and rollers - included standard with panic device • Solid stainless steel - included standard with fire-rated device • Top strike mortised into frame • Double door strike for use with CVR and RIM device available

SPECIFICATIONS

Door Thickness:	1-3/4" (44 mm) - Standard
Door Width:	• 36" (914 mm) field sizeable to 30" (762 mm) panic-rated door and 28" (711 mm) fire-rated door • 48" (1219 mm) field sizeable to 36" (914 mm) panic- or fire-rated door
Projection:	• 3" (76 mm) in undogged position • 2-5/8" (67 mm) in dogged position
Vertical Rods:	• Rods for 7' (2134 mm) doors - 34-5/8" (879 mm) top rod length • Rods for 8' (2438 mm) and 10' (3048 mm) doors - 46-5/8" (1184 mm) top rod length • Extension rod kits available, 2' (610 mm) or 3' (914 mm) for doors over 7'
Stile Width:	• 4" (102 mm) minimum stile width required • All stile widths are measured from door edge
Notes:	• NOT recommended for doors with inset greater than 1/8", for example: double egress frames, or jamb depths over 5-3/4" or greater - for additional information, contact Hager Companies • Center line prep is 40" (1016 mm) - if door prep elevation is lower, a longer top rod will need to be ordered • Recommended for use on appropriately reinforced doors

TRIM

- 4500 Series escutcheon trim for vertical rod device is surface mounted with a variety of lever options (pp. 22-23)
- Pull plate trim (excluding 45PT)
- Vandal resistant
- Rim cylinder x optional pull

FINISHES

- US3, US4, US10, US10B, US26, US26D, US32D, BLK
- Trim is not available in US32D
- Anti-Microbial available with US26D, US32D

4500 SERIES - GRADE 1 CONCEALED VERTICAL ROD - LESS BOTTOM ROD (CLB)

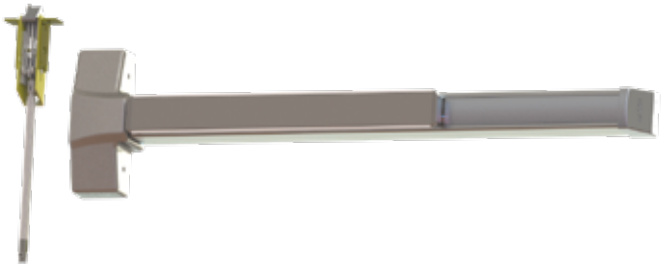

WARRANTY | Lifetime warranty

FEATURES

Certification:	BHMA Certified Grade 1 and meets life safety codes and fire-safety requirements. See charts on page 4 for details and options.
Covers:	Stainless steel, zinc
Cover Tube:	Aluminum
Dogging:	• Hex key dogging standard on panic-rated devices • Less dogging available on panic-rated devices, specify LD • Cylinder dogging is available on panic-rated devices, specify CD (3902 1-1/8" (29 mm) mortise cylinder with standard cam sold separately)
End Caps:	• Zinc • Flush end cap option available
Fasteners:	• Wood and machine screws • Thru-bolts supplied standard
Latchbolt:	Top - 1/2" (13 mm) throw, pullman type with automatic dead-latching, stainless steel
Strikes:	• Stainless steel with stainless steel pin and roller - included standard with panic device • Solid stainless steel - included standard with fire-rated device • Top strike mortised into frame • Double door strike for use with CVR and RIM device available

SPECIFICATIONS

Door Thickness:	1-3/4" (44 mm) - Standard
Door Width:	• 36" (914 mm) field sizeable to 30" (762 mm) panic-rated door and 28" (711 mm) fire-rated door • 48" (1219 mm) field sizeable to 36" (914 mm) panic- or fire-rated door
Projection:	• 3" (76 mm) in undogged position • 2-5/8" (67 mm) in dogged position
Vertical Rods:	• Rods for 7' (2134 mm) doors - 34-5/8" (879 mm) top rod length • Rods for 8' (2438 mm) and 10' (3048 mm) doors - 46-5/8" (1184 mm) top rod length • Extension rod kits available, 2' (610 mm) or 3' (914 mm) for doors over 7'
Stile Width:	• 4" (102 mm) minimum stile width required • All stile widths are measured from door edge
Notes:	• NOT recommended for doors with inset greater than 1/8", for example: double egress frames, or jamb depths over 5-3/4" or greater • A spring loaded fire bolt 2-649-0166 must be used on fire-rated LBR devices used on a pair of doors to ensure the device's fire rating • Center line prep is 40" (1016 mm) - if door prep elevation is lower, a longer top rod will need to be ordered • Recommended for use on appropriately reinforced doors

TRIM

- 4500 Series escutcheon trim for vertical rod device is surface mounted with a variety of lever options (pp. 22-23)
- Pull plate trim (excluding 45PT)
- Vandal resistant
- Rim cylinder x optional pull

FINISHES

- US3, US4, US10, US10B, US26, US26D, US32D, BLK
- Trim is not available in US32D
- Anti-Microbial available with US26D, US32D

4500 SERIES - GRADE 1 CONCEALED VERTICAL ROD/CLB DEVICES - ELECTRIFIED

WARRANTY

- One-year on electrified components
- Lifetime on hardware components

FEATURES

Same as 4500 Series CVR Device

SPECIFICATIONS

Door Width:

- 36" (914 mm) field sizeable to 30" (762 mm) panic-rated door and 28" (711 mm) fire-rated door for devices with any monitoring switches
- 48" (1219 mm) field sizeable to 36" (914 mm) panic- or fire-rated door for devices with any monitoring switches
- 36" field sizeable to 34" door minimum for devices with motorized electric latch retraction or delayed egress
- 36" door minimum for devices with solenoid electric latch retraction, electric dogging or alarm kit
- 48" field sizeable to 42" door minimum for devices with solenoid electric latch retraction, electric dogging or alarm kit
- 48" field sizeable to 40" door minimum with motorized electric latch retraction or delayed egress

Notes:

- NOT recommended for doors with inset greater than 1/8", for example: double egress frames, or jamb depths over 5-3/4" or greater
- A spring loaded fire bolt 2-649-0166 must be used on fire-rated LBR devices used on a pair of doors to ensure the device's fire rating

FUNCTIONS

- ELR - Electric Latch Retraction
- ED - Electric Dogging
- RX - Request to Exit (field installation kit 2-649-5001)
- RX2 - Dual Request to Exit
- ELRX - Electric Latch Retraction with Request to Exit
- EDRX - Electric Dogging with Request to Exit
- ALK - Alarm Kit (kit 4940, tamper switch 2-649-1090)
- AI - Authorized Ingress
- RXAI - Request to Exit with Authorized Ingress
- LM - Latchbolt Monitor (2-649-0168)
- RXLM - Request to Exit with Latchbolt Monitor
- MLR - Motor Driven Electric Latch Retraction (field installation kit 2-649-5007)
- MLRX - Motor Driven Electric Latch Retraction with Request to Exit
- DE - Delayed Egress (must order wall mount controller 2-679-0630 separately)
- OBDE - Onboard Delayed Egress (Requires 1-1/8" - 1 3/8" length, 3978 Cloverleaf or equivalent tailpiece required)

Electrical Specifications and Wire Requirements - See 4500 Series Electric Modifications page 20.

HAGER COMPANIES

4500 SERIES - GRADE 1 MORTISE DEVICE

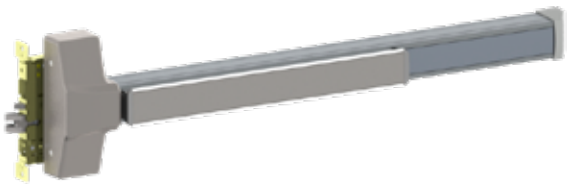

WARRANTY | Lifetime warranty

FEATURES

Certification:	BHMA Certified Grade 1 and meets life safety codes and fire-safety requirements. See charts on page 4 for details and options.
Covers:	Stainless steel, zinc
Cover Tube:	Aluminum
Dogging:	• Hex key dogging standard on panic-rated devices • Less dogging available on panic-rated devices, specify LD • Cylinder dogging is available on panic-rated devices, specify CD (3902 1-1/8" (29 mm) mortise cylinder with standard cam sold separately)
End Caps:	• Zinc • Flush end cap option available
Fasteners:	• Wood and machine screws • Thru-bolts supplied standard
Latchbolt:	3/4" (19 mm) throw with anti-friction tongue, all stainless steel with auxiliary deadlocking latch
Strikes:	4-7/8" (124 mm) ASA strike-standard

SPECIFICATIONS

Door Thickness:	1-3/4" (44 mm) - Standard
Door Width:	• 36" (914 mm) field sizeable to 30" (762 mm) panic-rated door and 28" (711 mm) fire-rated door • 48" (1219 mm) field sizeable to 36" (914 mm) panic- or fire-rated door
Projection:	• 3" (76 mm) in undogged position • 2-5/8" (67 mm) in dogged position
Stile Width:	• 4-1/2" (114 mm) • All stile widths are measured from door edge.
Notes:	Recommended for use on appropriately reinforced doors

TRIM

- 4500 Series escutcheon trim for mortise device is available with a variety of lever options (p. 25) (3902, 1-5/8" cylinder with standard cam sold separately)
- Mortise cylinder (1-3/8") with cylinder collar (11/16") x optional pull
- Mortise trim (45MB, 45MC, 45MD, 45MN) does not match center line of other 4500 Series trim (45BE, 45CE, 45DT, 45NL)

FINISHES

- US3, US4, US10, US10B, US26, US26D, US32D, BLK
- Trim is not available in US32D
- Anti-Microbial available with US26D, US32D

4500 SERIES - GRADE 1 MORTISE DEVICE - ELECTRIFIED

WARRANTY

- One-year on electrified components
- Lifetime on hardware components

FEATURES

Same as 4500 Series Mortise Device

SPECIFICATIONS

Door Width:

- 36" (914 mm) field sizeable to 30" (762 mm) panic-rated door and 28" (711 mm) fire-rated door for devices with any monitoring switches
- 48" (1219 mm) field sizeable to 36" (914 mm) panic- or fire-rated door for devices with any monitoring switches
- 36" field sizeable to 34" door minimum for devices with motorized electric latch retraction or delayed egress
- 36" door minimum for devices with electric dogging or alarm kit
- 48" field sizeable to 42" door minimum for devices with electric dogging or alarm kit
- 48" field sizeable to 40" door minimum with motorized electric latch retraction or delayed egress

FUNCTIONS

- ED - Electric Dogging
- EU/EL - Electrified Mortise Exit Device - provides means of locking/unlocking outside lever trim control remotely
- RX - Request to Exit
- RX2 - Dual Request to Exit
- EDRX - Electric Dogging with Request to Exit
- ALK - Alarm Kit (kit 4940, Latchbolt Monitor 2-649-0168, Tamper Switch 2-649-1090)
- MLR - Motor Driven Electric Latch Retraction (field installation kit 2-649-5007)
- MLRX - Motor Driven Electric Latch Retraction with Request to Exit
- DE - Delayed Egress (must order wall mount controller 2-679-0630 separately)
- OBDE - Onboard Delayed Egress (Requires 1-1/8" - 1 3/8" length, 3978 Cloverleaf or equivalent tailpiece required)

Electrical Specifications and Wire Requirements - See 4500 Series Electric Modifications page 20.

4500 SERIES - DUMMY PUSH PAD

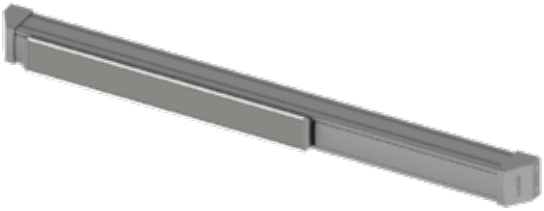

WARRANTY | Lifetime warranty

FEATURES

Application:	For use with 4500 and 4600 Series Exit Devices
Cover Tube:	Aluminum
End Caps:	• Zinc • Flush end cap option available
Fasteners:	• Wood and machine screws • Thru-bolts supplied standard
Available Electric Functions:	• RX - Request to Exit • RX2 - Dual Request to Exit

SPECIFICATIONS

Door Thickness:	1-3/4" (44 mm) - Standard
Door Width:	• 36" (914 mm) field sizeable to 27" (686 mm) door • 48" (1219 mm) field sizeable to 36" (914 mm) door
Projection:	2-5/8" (67 mm)
Stile Width:	• 2-1/8" (54 mm) - minimum stile width • All stile widths are measured from door edge

FINISHES | • US3, US10B, US26D, US32D, BLK
• Anti-Microbial available with US26D, US32D

4500 SERIES - 4940 ALARM KIT

WARRANTY

- One-year on electrified components
- Lifetime on hardware components

SPECIFICATIONS

Battery:	• Standard 9-Volt battery required • Audible chirp and alternating LED color flash when battery is low
Alarm:	100 decibel horn sounds immediately upon pressing push pad
Cylinder:	• 1-1/8" or 1-1/4" Mortise cylinders acceptable • Hager standard cam required • Cylinder sold separately
Activation:	• Alarm is armed by turning key clockwise • Alarm is disarmed by turning the key counter-clockwise • Alarm is turned to service mode by turning the key counter-clockwise twice
Alarm Timing:	• Alarm will sound for either 1, 3, 5 minutes or continuously • Times are selectable by on board switches
Warning Decal:	"Emergency Exit Only – Alarm Will Sound" on push pad of exit device
Indicator:	• LED Indicator • Red LED will illuminate intermittently when armed • Green LED will illuminate when unarmed • Blue LED will illuminate in service mode • Alternate colors flash when battery is low
Options:	• Tamper switch available that sounds alarm when end cap is removed • Latch monitor switch is available that sounds alarm when latch is retracted without actuating the push pad • Latch monitor switch typically used with Surface Vertical Rod devices • When utilizing the latch monitor, the outside trim unit will also sound alarm
Output:	Alarm is equipped with output port

4500 SERIES - ELECTRIC MODIFICATIONS

FUNCTION	#	DESCRIPTION
Electric Latch Retraction - Solenoid	ELR	Provides the means of locking or unlocking exit devices remotely. Requires the use of Hager 2901 or 2902 power supply or warranty voided. *Note: Mortise Exits require Motor Driven Latch Retraction (MLR).*
Electric Dogging	ED	Provides continuous latch retraction and dogging simultaneously.
Request to Exit	RX	Used to shunt an alarm, activate an alarm, provide release of magnetic locks, or signal a console.
Electric Latch Retraction with Request to Exit	ELRX	Provides the means of locking or unlocking exit devices remotely, along with an SPDT switch. Requires the use of Hager 2901 or 2902 power supply or warranty voided. *Note: Mortise Exits will require Motor Driven Latch Retraction.*
Electric Dogging with Request to Exit	EDRX	Provides continuous latch retraction and dogging simultaneously along with an SPDT switch.
Dual Request to Exit	RX2	Features two SPDT switches
Latchbolt Monitoring	LM	An internal SPDT switch that monitors the latchbolt to signal both egress and access of an opening.
Latchbolt Monitoring/ Request to Exit	RXLM	Two internal SPDT switches that monitor the latchbolt and the pushbar simultaneously.
Electric Trim	ET	Provides the means of locking or unlocking outside lever trim controls remotely. Specify Fail Safe (EL) or Fail Secure (EU) and voltage (12V or 24V).
Authorized Ingress/Key Monitoring	AI	An internal SPDT switch that monitors the operation of the outside trim, available for use with either the 45BE, 45CE or 45NL trim or Night Latch by optional pull. Must be ordered with the device.
Request to Exit/ Authorized Ingress	RXAI	Two internal SPDT switches that monitor the pushbar and the outside trim simultaneously, available for use with either the 45CE or 45NL trim. Must be ordered with the device.
OnBoard Delayed Egress	OBDE	Delays egress for 15 seconds (30 seconds optional) when unauthorized egress is initiated. Modification can be made to 4501 or 4601 exit devices.
Delayed Egress	DE	Delays egress for 15 or 30 seconds when unauthorized egress is initiated. Wall mount controller (2-679-0630) provides digital countdown display with verbal instructions or alarm tone only and must be ordered separately.
Motor Driven Electric Latch Retraction	MLR	Provides the means of locking or unlocking exit devices remotely using an electric motor. Recommend Hager 2903 or 2904 Power Supply.
Motor Driven Electric Latch Retraction with Request to Exit	MLRX	Provides the means of locking or unlocking exit devices remotely using an electric motor, along with an SPDT switch. Recommend Hager 2903 or 2904 Power Supply.
Electrified Mortise Exit Device	EU/EL	Provides the means of locking or unlocking outside lever trim controls remotely. Specify Fail Safe (EL) or Fail Secure (EU) and voltage (12V or 24V).

ELECTRICAL SPECIFICATION/RATINGS AND WIRE REQUIREMENTS

Electrical Specification/ Ratings:

- ED; .225 AMP @ 24 Volt +/- 2V
- RX or LM; 125 VAC (3 AMP current); 30 VDC (2 AMP current)
- ELR; Requires 2901/2902 power supply
- MLR; 1 AMP in rush @ 24 VDC +/- 2V, 400 mA holding
- DE; Single, 430 mA, Tandem 680 mA @ 24 VDC
- OBDE; Single, 540 mA; Tandem 790 mA @ 24 VDC

Wire Requirements:

- Status switches (i.e. RX, LM, etc.) require 2 wires per switch to monitor a normally open (NO) or normally closed (NC) position
- All devices provide 3 wires per switch so both NO and NC positions can be monitored
- Monitoring both positions will require 3 wires per switch

QUICK CONNECT

Available on AI, ED, ELR, LM, MLR, and RX

POWER SUPPLIES

For power supply options see electrified section, pages 41-49.

ALARMED DEVICES - SPECIFY WHEN ORDERING (Note: Alarm kit components may be purchased separately)

ALK - Alarm Kit
ALM - ALK with latch monitor switch (recommended for use with SVR devices)
ALT - ALK with tamper switch
ALL - ALK with latch monitor and tamper switch

4500 SERIES ESCUTCHEON TRIM - FOR 4500 RIM & VERTICAL ROD DEVICES

WARRANTY
- One-year on electrified components
- Lifetime on hardware components

SPECIFICATIONS

Escutcheon: 2-7/8" x 10-3/4" (73 mm x 273 mm)

Notes:
- Cannot be used with 4500 Series Mortise exit device
- 45BE, 45CE, 45DT, 45NL trim does not match centerline of 4500 Series Mortise trim (45MB, 45MC, 45MD and 45MN)

LEVERS Archer, August, Charles, Johnston, Joshua, Louis, Warren, William or Withnell Levers

FINISHES US3, US4, US10, US10B, US26, US26D (Not Available in US32D), BLK
Anti-Microbial available on US26D

45BE
Blank Escutcheon
ANSI Function: 14 - Always operable (passage)

45CE
Cylinder Escutcheon (Free-wheeling when locked)
ANSI Function: 08 - Key locks or unlocks lever
Cylinder: Requires 3902 mortise cylinder with standard cam (sold separately)

45DT
Dummy Trim
ANSI Function: 02 - Pull when device is dogged down

45NL
Night Latch
ANSI Function: 03 - Key retracts latchbolt
Cylinder: Requires 3901 rim cylinder with long tailpiece (sold separately)

45ET
Electrified Trim (Free-wheeling when locked)
ANSI Function:
- 45ET EL- Electric Trim (Fail Safe)
- 45ET EU- Electric Trim (Fail Secure)

Cylinder: Requires 3902 mortise cylinder, 1-1/4" with standard cam (sold separately)
Voltage: 12V or 24V

Electrical Specifications and Wire Requirements - See 4500 Series Electric Modifications page 20.

4500 SERIES - ESCUTCHEON TRIM - LEVER OPTIONS FOR 4500 RIM & VERTICAL ROD DEVICES

ARCHER LEVER

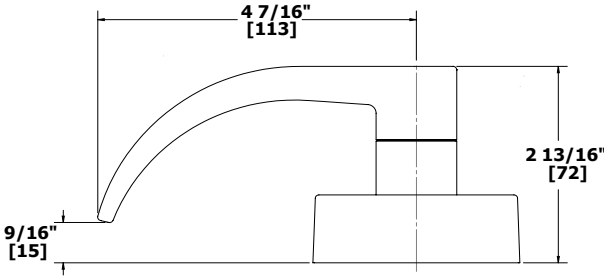

AUGUST LEVER

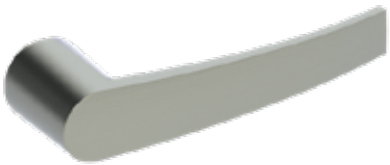

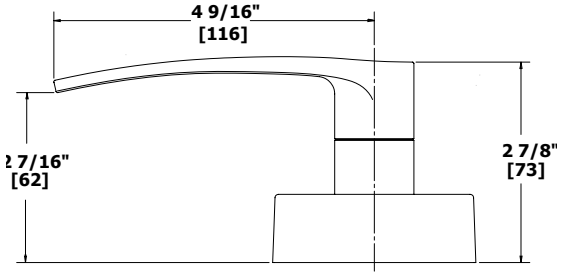

CHARLES LEVER

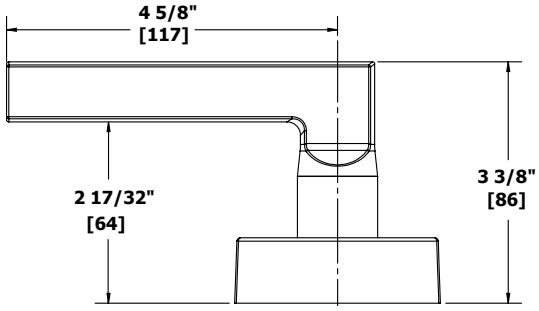

JOHNSTON LEVER - HANDED

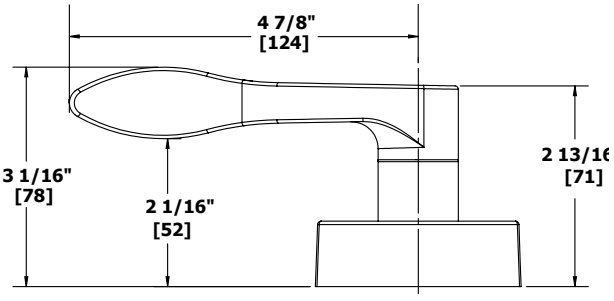

JOSHUA LEVER

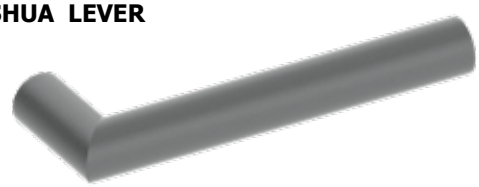

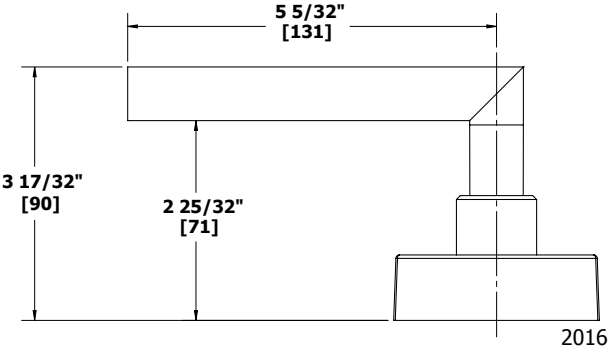

4500 SERIES - ESCUTCHEON TRIM - LEVER OPTIONS FOR 4500 RIM & VERTICAL ROD DEVICES

LOUIS LEVER

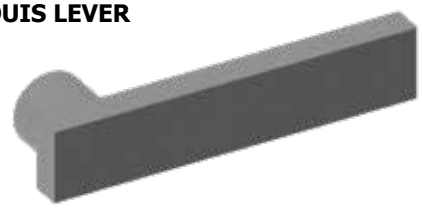

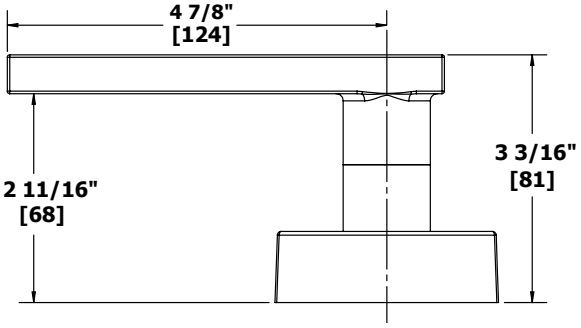

WARREN LEVER - HANDED

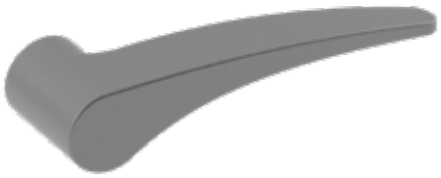

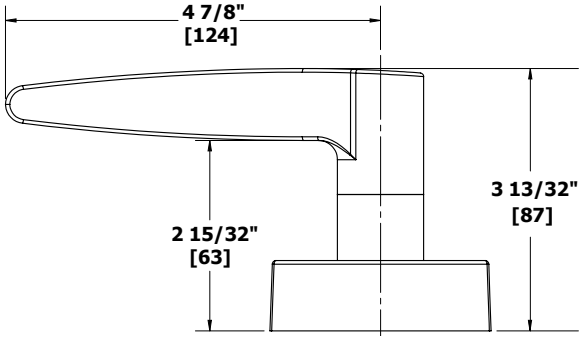

WILLIAM LEVER

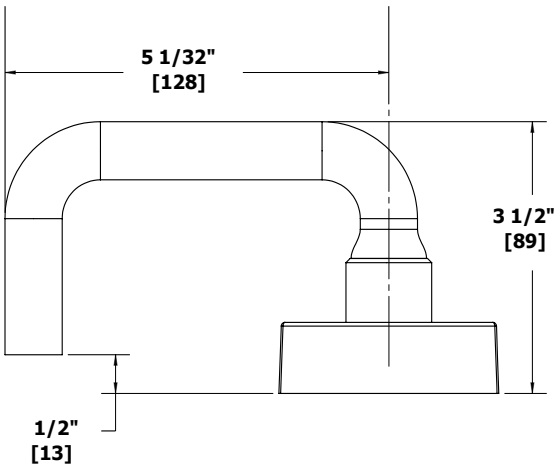

WITHNELL LEVER

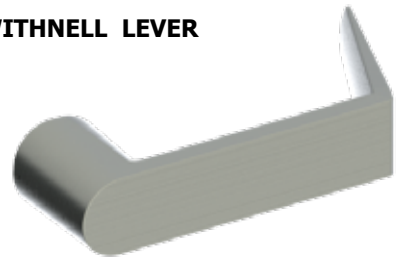

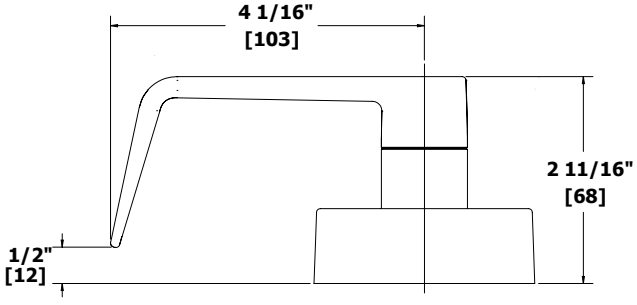

4500 SERIES - ESCUTCHEON TRIM - FOR 4500 MORTISE DEVICE

WARRANTY

- One-year on electrified components
- Lifetime on hardware components

SPECIFICATIONS

Escutcheon: 2-15/16" x 10" (75 mm x 254 mm)

Notes:

- Cannot be used with 4500 Series Rim or Vertical Rod devices
- Mortise trim (45MB, 45MC, 45MD, 45MN) does **not** match center line of other 4500 Series trim (45BE, 45CE, 45DT, 45NL)

LEVERS

Archer, August, William or Withnell Levers

FINISHES

- US3, US4, US10, US10B, US26, US26D, (Not Available in US32D), BLK
- Anti-Microbial available with US26D

45MB

Blank Escutcheon - For Use with 4501M Mortise Exit Device

ANSI Function: 14 - Always operable (passage)

45MC

Cylinder Escutcheon - For Use with 4501M Mortise Exit Device

ANSI Function: 08 - Key locks or unlocks lever (free-wheeling when locked)

Cylinder: Requires 3902, 1-5/8" mortise cylinder with standard cam (sold separately)

45MD

Dummy Trim - For Use with 4501M Mortise Exit Device

ANSI Function: 02 - Pull when device is dogged down

Cylinder: Requires 3902, 1-5/8" mortise cylinder with standard cam (sold separately)

45MN

Night Latch - For Use with 4501N Mortise Exit Device

ANSI Function: 03 - Key retracts latchbolt

Cylinder: Requires 3902, 1-5/8" mortise cylinder with standard cam (sold separately)

4500 SERIES - ESCUTCHEON TRIM - LEVER OPTIONS FOR 4500 MORTISE DEVICE

ARCHER LEVER

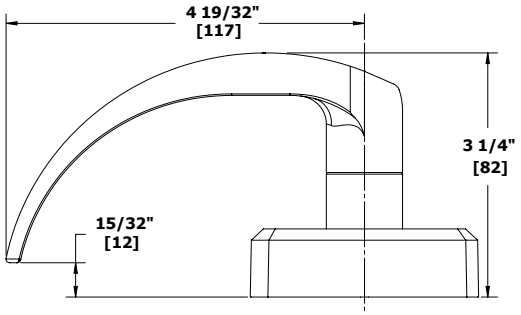

AUGUST LEVER

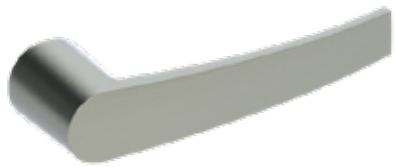

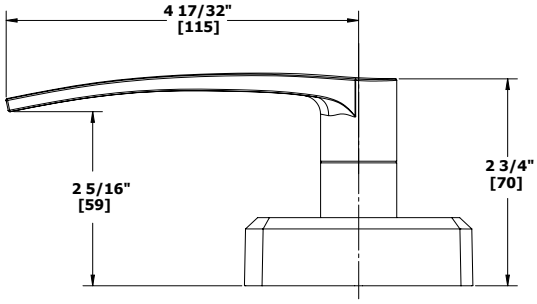

WILLIAM LEVER

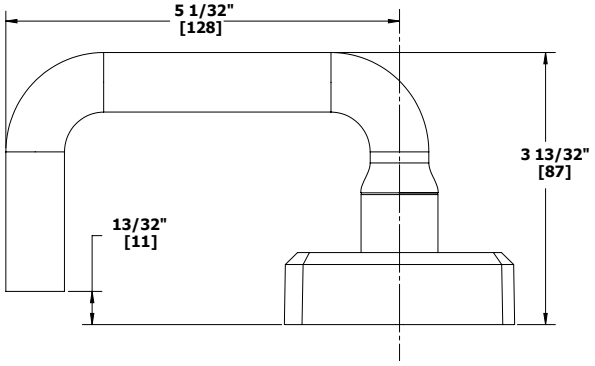

WITHNELL LEVER

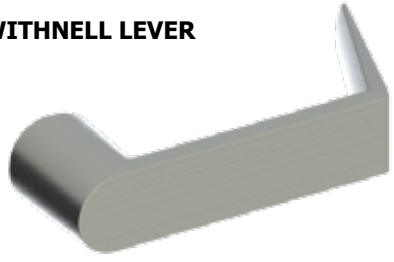

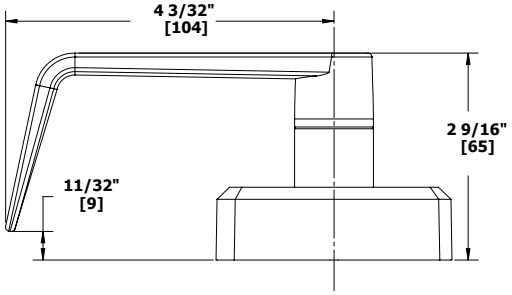

4500 SERIES - PULL PLATE TRIM

SPECIFICATIONS (45PD, 45PN, 45PT)

Plate:	3" x 14" (76 mm x 356 mm)
Projection:	1-3/4" (44 mm)
Pull CTC:	5-1/2" (140 mm)

45PD
Dummy Trim

ANSI Function:	02 - Pull when device is dogged down
Finishes:	US3, US4, US10, US10B, US26, US26D, US32D
Notes:	• For use with 4500 RIM, SVR, LBR, CLB devices, not for use with CVR • Anti-Microbial available with US26D, US32D

45PN
Night Latch

ANSI Function:	03 - Key retracts latchbolt
Finishes:	US3, US4, US10, US10B, US26, US26D, US32D
Cylinder:	Requires 3901 rim cylinder (sold separately)
Notes:	• Includes retaining cup for 161 door prep • For use with 4500 RIM, SVR, LBR, CLB devices, not for use with CVR • Anti-Microbial available with US26D, US32D

45PT
Thumb Piece Pull Plate Trim

ANSI Function:	05 - Key locks or unlocks thumbpiece
Finishes:	US32D
Cylinder:	Requires 3902 mortise cylinder with standard cam (sold separately)
Notes:	For use with 4500 Rim exit only, not for use with vertical rod devices

313S
Anti Vandal Pull

Certification:	Meets ANSI A156.6 for J401 Pull and J407 Pull Plate
Size:	6-11/32" x 11" (161 mm x 280 mm)
Projection:	1-7/8" (48 mm)
Clearance:	1-5/8" (41 mm)
Door Thickness:	1-3/4" – 2" (45 mm - 51 mm)
Materials:	11 gauge stainless steel
Finishes:	US32D
Fasteners:	Thru bolts directly to device
Options:	• Cylinder cutout available 1-1/4" (32 mm) dia. standard for exit device, specify handing • Plastisol grip available
Cylinder:	Cylinder and cylinder collar must be ordered separately • Requires 2-649-0137 7/16" cylinder collar with 3901 rim cylinder 1-1/4"- 1-3/8" long (see instructions for more detail)
Notes:	Available with latchguard (specify 313L)

RIM Cylinder by Optional Pull

ANSI Function:	03 - Key retracts latchbolt
Finishes:	US3, US4, US10, US10B, US26, US26D, US32D, BLK
Cylinder:	Requires 3901 rim cylinder (sold separately). Standard (attached) and long tailpieces in every box.
Notes:	• For use with 4500 RIM, SVR, LBR, CLB devices, not for use with CVR • For pull options see Trim & Auxiliary section

4500 SERIES - STRIKES

4915
Threshold Strike
Optional strike for use with surface vertical rod exit device and saddle threshold; not for fire-rated doors

Finishes: US32D

4920
Strike
Included standard with 4500 Series Rim exit devices; not for fire-rated doors

Finishes: US32D

4920F
Fire-rated Strike
Included standard with fire-rated 4500 Series rim exit devices

Finishes: US32D

4921
Double Door Strike
Optional strike to be used with 4500 Series Surface Vertical Rod and Rim exit devices; not for fire-rated doors

Finishes: US3, US4, US10, US10B, US26, US32D, BLK

4923
Top Strike
Included standard with 4500 Series Surface Vertical Rod exit devices; not for fire-rated doors

Finishes: US32D

4923F
Fire-rated Top Strike
Included standard with fire-rated 4500 Series Surface Vertical Rod exit devices

Finishes: US32D

4924
Bottom Strike
Included standard with 4500 Series Vertical Rod exit devices; not for fire-rated doors

Finishes: US32D

4924F
Fire-rated Bottom Strike
Included standard with fire-rated 4500 Series Vertical Rod exit devices

Finishes: US32D

4945
Top Strike
Included standard with 4500 Series Concealed Vertical Rod exit devices; not for fire-rated doors

Finishes: US32D

4945F
Fire-rated Top Strike
Included standard with fire-rated 4500 Series Concealed Vertical Rod exit devices

Finishes: US32D

MORTISE EXIT STRIKE

Included standard with 4500 Series Mortise exit device; not for fire-rated doors.

Finishes: US10B (2-649-0205), US26D (2-649-0204), US32D (2-649-0203)

FIRE-RATED MORTISE EXIT STRIKE

Included standard with fire-rated 4500 Series Mortise exit device; not for fire-rated doors.

Finishes: US10B (2-649-0208), US26D (2-649-0207), US32D (2-649-0206)

4500 SERIES - ACCESSORIES

4926
Cylinder Dogging Conversion Kit
For use with panic-rated 4500 Series devices

Finishes:	US3, US4, US10, US10B, US26, US26D, US32D, BLK. Anti-microbial available with US26D, US32D.
Packaging:	One (1) each dogging plate, cylinder collar, cash box nut
Notes:	• Mortise cylinder 3902 with standard cam, sold separately • Specify 36" (914 mm) or 48" (1219 mm)

4927
Bottom Latch Assembly
For use with 4500 Series Surface Vertical Rod exit device

Description:	1/2" (13 mm) throw, pullman type, held retracted during door swing, stainless steel
Finishes:	US3, US4, US10, US10B, US26, US26D, US32D, BLK
Packaging:	One (1) bottom latch with cover and appropriate fasteners

4928
Top Latch Assembly
For use with 4500 Series Surface Vertical Rod exit device

Description:	1/2" (13 mm) throw, pullman type, held retracted during door swing, stainless steel
Finishes:	US3, US4, US10, US10B, US26, US26D, US32D, BLK
Packaging:	One (1) top latch with cover and appropriate fasteners

2-649-0250/2-649-0257
Photoluminescent
Push bar cover option for 4500 & 4600 Series exit devices

Description:	2-649-0250 - 4500/4600 36" 2-649-0275 - 4500/4600 48"
Features:	• Requires no wiring or maintenance • Recharges with exposure to ambient light

4929
Top/Bottom Rod Replacement Kit
For use with 4500 Series Surface Vertical Rod exit device

Finishes:	US3, US4, US10, US10B, US26, US26D, US32D, BLK.
Packaging:	One (1) each 45-1/4" (1149 mm) rod, rod guide, rod connector, and appropriate fasteners

4929C
Concealed Rod Replacement Kit
For use with 4500 Series Concealed Vertical Rod exit device

Material:	Hardened aluminum
Finishes:	US26D
Packaging:	One (1) each 46-5/8" (1184 mm) rod, rod connector and appropriate fasteners

4930R
Shim Kit
For use with 4500 Series Rim exit devices where a glass bead kit would interfere with exit device

Finishes:	US3, US4, US10, US10B, US26, US26D, US32D, BLK
Packaging:	Two (2) each 1/8" (3 mm) shims and appropriate fasteners

4930S
Shim Kit
For use with 4500 Series Surface Vertical Rod exit devices where a glass bead kit would interfere with exit device

Finishes:	US3, US4, US10, US10B, US26, US26D, US32D, BLK
Packaging:	Two (2) each 1/8" (3 mm) shims and appropriate fasteners

4500 SERIES - ACCESSORIES

4932C
Head Cover
For use with 4500 Series Concealed Vertical Rod or Mortise exit devices

Finishes:	US3, US4, US10, US10B, US26, US26D, US32D, BLK. Anti-microbial available with US26D, US32D.
Packaging:	One (1) head cover and four (4) each M4 x 6mm MS

4932R
Head Cover
For use with 4500 Series Rim exit device

Finishes:	US3, US4, US10, US10B, US26, US26D, US32D, BLK, Anti-microbial available with US26D, US32D.
Packaging:	One (1) head cover and four (4) each M4 x 6mm MS

4932S
Head Cover
For use with 4500 Series Surface Vertical Rod exit devices

Finishes:	US3, US4, US10, US10B, US26, US26D, US32D, BLK. Anti-microbial available with US26D, US32D.
Packaging:	One (1) head cover and four (4) each M4 x 6mm MS

4936
24" Extension Rod Kit
For use with 4500 Series Vertical Rod exit devices

Finishes:	US3, US4, US10, US10B, US26, US26D, US32D, BLK
Packaging:	One (1) each 24" (610 mm) extension rod, rod connector, rod guide, plus wood and machine screws
Notes:	Extension rods threaded on both ends; if cuts are required, cut the standard rod on non-threaded end

4937
36" Extension Rod Kit
For use with 4500 Series Vertical Rod exit devices

Finishes:	US3, US4, US10, US10B, US26, US26D, US32D, BLK
Packaging:	One (1) each 36" (914 mm) extension rod, rod connector, rod guide, plus wood and machine screws
Notes:	Extension rod threaded on both ends; if cuts are required, cut the standard rod on non-threaded end

Standard

Flush

END CAPS
For use with all 4500 and 4600 Series exit devices

Finishes: Anti-microbial available with US26D, US32D.

	Standard	Flush
US3	(2-649-0038)	(2-649-0218)
US4	(2-649-0039)	(2-649-0220)
US10	(2-649-0040)	(2-649-0214)
US10B	(2-649-0041)	(2-649-0215)
US26	(2-649-0042)	(2-649-0216)
US26D	(2-649-0043)	(2-649-0217)
US32D	(2-649-0044)	(2-649-0219)
BLK	(2-649-5013)	(2-649-5012)

Packaging: One (1) each cap and bracket plus fasteners

2-649-0166
Fire Bolt Kit
For use with fire-rated 4500 Series Vertical Rod less bottom rod device

Faceplate:	1-25/32" x 1" (45 mm x 25 mm)
Bolt Diameter:	7/16" (11 mm)
Bolt Length:	1-1/2" (38 mm)
Materials:	Stainless steel
Packaging:	One (1) each fire bolt, plastic plug, head cover plug, and appropriate fasteners
Notes:	Required with a fire-rated pair of LBR or LLB devices to ensure rating

4600 Series

NARROW STILE HEAVY DUTY COMMERCIAL APPLICATION

The Hager 4600 Series is designed and engineered to provide a lifetime of superior performance on narrow stile doors (2-inch minimum) in heavy duty commercial applications. The 4600 Series design complements aluminum and glass construction and provides excellent durability for a range of applications. Properly applied and maintained Hager 4600 Series Exit Devices and Trim are backed by a lifetime warranty, providing peace of mind from distributor to building owner. Go to www.hagerco.com for specific warranty conditions.

Hager 4600 Series Exit Devices are BHMA certified Grade 1 and meet Life Safety codes and Fire Safety requirements.

Extruded aluminum construction, stainless steel push bar covers, die cast caps and covers, and dead locking stainless steel Pullman type latchbolts provide premium security and performance at value pricing.

4600 SERIES - COMPLIANCE AND CERTIFICATIONS

4600 SERIES DEVICES

BHMA Certified ANSI A156.3 Grade 1

UL305 Listed for Panic Hardware

UL10C Positive Pressure Rated

UL10B Neutral Pressure Rated

Complies with ANSI A117.1 for Accessible Buildings and Facilities

4600 SERIES FIRE-RATED DEVICES

UL/cUL Listed for "A" Label Door Up to and Including 3 hours on 4’ x 8’ doors

Rim with Fire-rated Removable Mullion 4900UF UL/cUL Listed and Warnock Hersey Listed for “A” Label Door Up to and Including 3 hours on 8’ x 8’ doors

4600 SERIES - GENERAL INFORMATION

Installation Made Easy
For the convenience of our customers, Hager Companies introduced several key features to the exit device market.

- Thru-bolts are included with every model. Wood and machine screws are also provided standard in every package.
- Slotted strikes speed up installation, allowing the installer to make easy adjustments to align the latch to the strike.
- Non-handed device offers added versatility and means less inventory.
- Escutcheon trim is surface mounted with the locking mechanism built inside, reducing door preparation and installation time by requiring fewer holes in the door.

Shim Kits
Shim kits are available for devices on doors with glass bead kits or other interfacing moldings. Each kit contains two 1/8" (3.2 mm) shims and the appropriate longer fasteners.

Dogging
Cylinder dogging or less dogging are available to replace the standard hex key dogging on panic exit devices. For less dogging, specify LD on order. For cylinder dogging, specify CD on order or purchase 4926 for retrofit applications. Unit requires 1-1/8" (29 mm) mortise cylinder (part number 3902) with standard cam.

Sizing
The exit device is cut for 36" (914 mm) and 48" (1219 mm) wide doors. For other door widths, cut exit device to appropriate length. Recommended overall length of exit device is equal to the door width minus four inches.

Trim Functions	Part Number	Function Description	ANSI Number
Blank Escutcheon	46BE	Always operable (Passage)	14
Cylinder Escutcheon	46CE	Key locks or unlocks lever	08
Dummy	46DT	Pull when device is dogged down	02
Night Latch	46NL	Key retracts latchbolt	03
Night Lever	46NK	Key releases lever; trim locked when key removed	09

Applications

Single Door Panic Exit Hardware - Blade Stop Strike (4950) and Frame

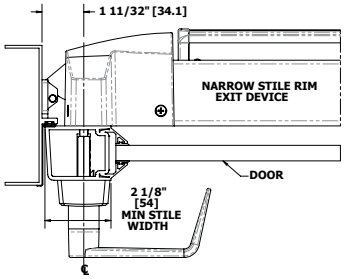

Single or Double Door with Panic Exit Hardware - Standard Strike (4920) and Frame

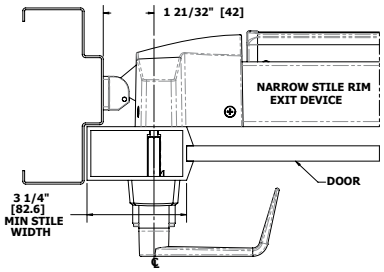

Single or Double Door with Panic Exit Hardware - Standard Strike (4920) and Mullion

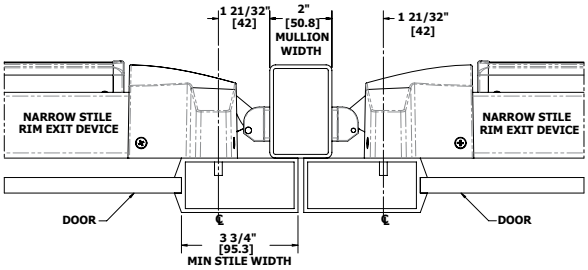

Single or Double Door with Panic Exit Hardware - Semi-Flush Mount Strike (4952) and Mullion

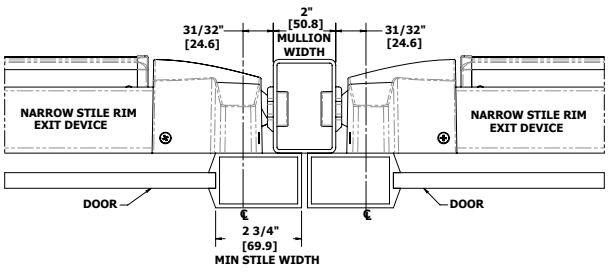

4600 SERIES - DEVICE PROFILE

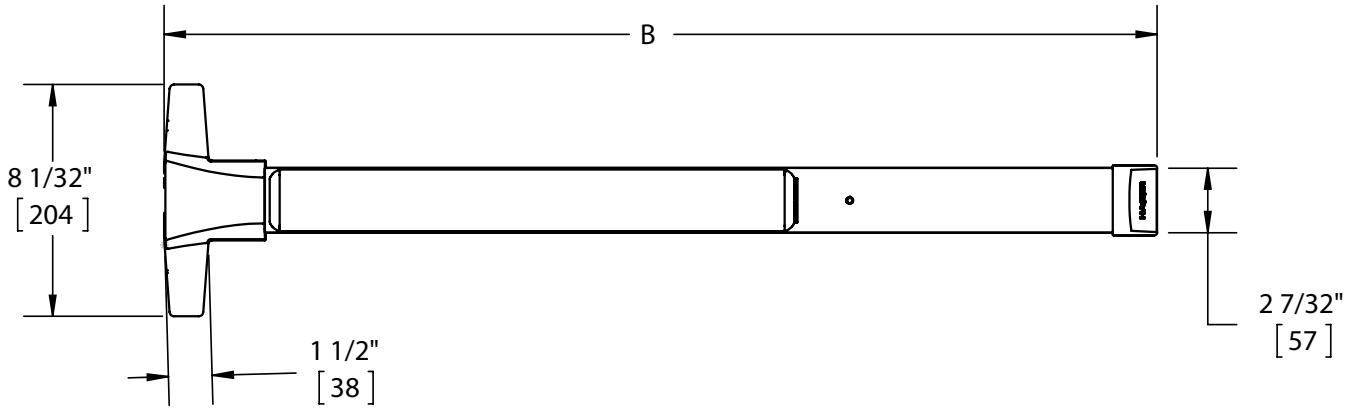

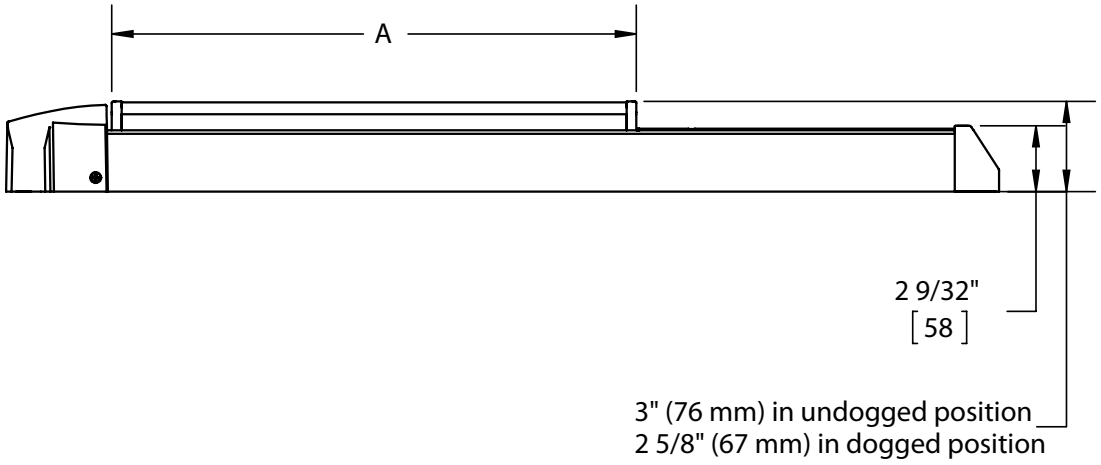

4600 SERIES	A	B
4600 PANIC -36"	18 5/32" (461mm)	34 3/8"(873mm)
4600 FIRE -36"		
4600 PANIC -48"	24"(609mm)	45 13/64"(1148mm)
4600 FIRE -48"		

4600 SERIES - HOW TO ORDER

4600 SERIES EXIT DEVICE

4601 — **Product Group**
4600 Series, Grade 1

RIM — **Type**
RIM - Rim Device

F — **Rating**
F - Fire Rated
0 - Non-Fire Rated
C - Cylinder Dogging
L - Less Dogging

36” — **Size**
36”
48”

US3 — **Finish**
US3
US4
US10
US10B
US26
US26D
US32D
BLK

1-3/4” — **Door Thickness**
1-5/8”
1-3/4”
2”
2-1/2”
3”

ELR — **Electric Modifications**
ALK - Alarm Kit
ALL - Alarm Kit w/ Tamper Switch and Latch Monitor
ALM - Alarm Kit w/ Latch Monitor
ALT - Alarm Kit w/ Tamper Switch
ED - Electric Dogging
EDRX - Electric Dogging w/ Request to Exit
ELR - Electric Latch Retraction
ELRX - Electric Latch Retraction w/ Request to Exit
LM - Latchbolt Monitor
RX - Request to Exit
RX2 - Dual Request to Exit
RXLM - Request to Exit w/ Latchbolt Monitor
MLR - Motor Driven Electric Latch Retraction
MLRX - Motor Driven Electric Latch Retraction w/ Request to Exit

4600 SERIES TRIM

46 — **Product Group**
46 - 4600 Series, Grade 1

CE — **Trim/Function**
BE - Blank Escutcheon
Function 14, always operable
CE - Cylinder Escutcheon
Function 08, key locks/unlocks lever
DT - Dummy Trim
Function 02, pull when dogged down
NL - Night Latch (Not available for 3” door)
Function 03, key retracts latchbolt
(for use with 4600 Rim Device only)
NK - Night Lever, Function 09, key releases lever, lever locked when key is removed

ARC — **Lever Style**
ARC - Archer
AUG - August
WLM - William
WTN - Withnell

US3 — **Finish**
US3
US4
US10
US10B
US26
US26D
BLK

1-3/4” — **Door Thickness**
1-5/8”
1-3/4”
2”
2-1/2”
3”

TW — **Options**
TW - Tactile Warning
A - Antimicrobial Coating (US26D only)

Notes:
1. Mortise cylinder 3902 with 3976 L cam is required for use with cylinder escutcheon trim and is sold separately.
2. Rim cylinder 3901 with long tailpiece is required for use with night latch trim and is sold separately.
3. For more cylinder information, please refer to Cylinder, Core & Keying in the Locks section of the catalog.
4. If using shim kit, specify total door thickness including shims.

* Extended lead time on flat black finish.

HAGER COMPANIES

4600 SERIES - GRADE 1 NARROW STILE RIM DEVICE

WARRANTY

Lifetime warranty

FEATURES

Certification:
BHMA Certified Grade 1 and meets life safety codes and fire-safety requirements.
See page 32 for details and options.

Covers:
Stainless steel, zinc

Cover Tube:
Aluminum

Dogging:
- Hex key dogging standard on panic-rated devices
- Less dogging available on panic-rated devices, specify LD
- Cylinder dogging available on panic-rated devices, specify CD
  3902 1-1/8" (29 mm) mortise cylinder with standard cam sold separately

End Caps:
- Zinc
- Flush end cap option available

Fasteners:
- Wood and machine screws
- Thru-bolts supplied standard

Latchbolt:
3/4" (19 mm) throw, pullman type with automatic dead-latching, stainless steel

Strikes:
- Blade stop (4950) - Standard with panic device
- Fire-rated strike (4920F) - Standard with fire-rated device
- Standard strike (4920) - Optional
- Single rabbit strike (4951) - Optional
- Semi-flush mount strike (4952) - Optional

SPECIFICATIONS

Door Thickness:
1-3/4" (44 mm) - Standard up to 3", except with night latch (NL) which is 2-1/2"

Door Width:
- 36" (914 mm) field sizeable to 30" (762 mm) panic-rated door and 28" (711 mm) fire-rated door
- 48" (1219 mm) field sizeable to 36" (914 mm) panic- or fire-rated door

Projection:
- 3" (76 mm) in undogged position
- 2-5/8" (67 mm) in dogged position

Stile Width:
- 2-1/8" (54 mm) - Minimum stile width required for 1/2" (13 mm) blade stop frame and 4950 blade stop strike
- 3-1/4" (83 mm) - Minimum stile width required for single door, 5/8" (16 mm) stop and 4920 standard strike
- 3-3/4" (95 mm) - Minimum stile width required for double door x mullion x 4920 strike
- 2-3/4" (70 mm) - Minimum stile width required for double doors with 2" (51 mm) mullion and 4952 semi-flush mount strike
- All stile widths are measured from door edge

Notes:
Recommended for use on appropriately reinforced doors

TRIM

- 4600 Series escutcheon trim for rim device is surface mounted with a variety of lever options (p. 41)
- Rim cylinder x optional pull

FINISHES

- US3, US4, US10, US10B, US26, US26D, US32D, BLK
- Trim not available in US32D
- Anti-Microbial available with US26D, US32D

4600 SERIES - GRADE 1 NARROW STILE RIM DEVICE - ELECTRIFIED

WARRANTY

- One-year on electrified components
- Lifetime on hardware components

FEATURES

Same as 4600 Series Narrow Stile Rim Device

SPECIFICATIONS

Door Width:

- 36" (914 mm) field sizeable to 30" (762 mm) panic-rated door and 28" (711 mm) fire-rated door for devices with any monitoring switches
- 48" (1219 mm) field sizeable to 36" (914 mm) panic- or fire-rated door for devices with any monitoring switches
- 36" field sizeable to 34" door minimum for devices with motorized electric latch retraction or delayed egress
- 36" door minimum for devices with solenoid electric latch retraction, electric dogging, or alarm kit
- 48" field sizeable to 42" door minimum for devices with solenoid electric latch retraction, electric dogging or alarm kit
- 48" field sizeable to 40" door minimum with motorized electric latch retraction or delayed egress

FUNCTIONS

- ELR - Electric Latch Retraction
- ED - Electric Dogging
- RX - Request to Exit (field installation kit 2-649-5001)
- RX2 - Dual Request to Exit
- ELRX - Electric Latch Retraction with Request to Exit
- EDRX - Electric Dogging with Request to Exit
- ALK - Alarm Kit (kit 4941, tamper switch 2-649-1090)
- LM - Latchbolt Monitor (2-649-0168)
- RXLM - Request to Exit with Latchbolt Monitor
- MLR - Motor Driven Electric Latch Retraction (field installation kit 2-649-5007)
- MLRX - Motor Driven Electric Latch Retraction with Request to Exit
- DE - Delayed Egress (must order with wall mount controller 2-679-0630 separately)

Electrical Specifications and Wire Requirements - See 4600 Series Electric Modifications page 39.

4600 SERIES - 4941 ALARM KIT

WARRANTY

- One-year on electrified components
- Lifetime on hardware components

SPECIFICATIONS

Battery:	• Standard 9-Volt battery required • Audible chirp and alternating LED color flash when battery is low
Alarm:	100 decibel horn sounds immediately upon pressing push pad
Cylinder:	• 1-1/8" or 1-1/4" Mortise cylinders acceptable • Hager standard cam required • Cylinder sold separately
Activation:	• Alarm is armed by turning key clockwise • Alarm is disarmed by turning the key counter-clockwise • Alarm is turned to service mode by turning the key counter-clockwise twice
Alarm Timing:	• Alarm will sound for either 1, 3, 5 minutes or continuously • Times are selectable by on board switches
Warning Decal:	"Emergency Exit Only – Alarm Will Sound" on push pad of exit device
Indicator:	• LED Indicator • Red LED will illuminate intermittently when armed • Green LED will illuminate when unarmed • Blue LED will illuminate in service mode • Alternate colors flash when battery is low
Options:	• Tamper Switch available that sounds alarm when end cap is removed • Latch monitor switch is available that sounds alarm when latch is retracted without actuating the push pad • Latch Monitor Switch typically used with Surface Vertical Rod devices • When utilizing the latch monitor, the outside trim unit will also sound alarm
Output:	Alarm is equipped with output port

4600 SERIES - ELECTRIC MODIFICATIONS

FUNCTION	#	DESCRIPTION
Electric Latch Retraction - Solenoid	ELR	Provides the means of locking or unlocking exit devices remotely. Requires the use of Hager 2901 or 2902 power supply or warranty voided. *Note: Mortise Exits require Motor Driven Latch Retraction (MLR).*
Electric Dogging	ED	Provides continuous latch retraction and dogging simultaneously.
Request to Exit	RX	Used to shunt an alarm, activate an alarm, provide release of magnetic locks, or signal a console.
Electric Latch Retraction with Request to Exit	ELRX	Provides the means of locking or unlocking exit devices remotely, along with an SPDT switch. Requires the use of Hager 2901 or 2902 power supply or warranty voided. *Note: Mortise Exits will require Motor Driven Latch Retraction.*
Electric Dogging with Request to Exit	EDRX	Provides continuous latch retraction and dogging simultaneously along with an SPDT switch.
Dual Request to Exit	RX2	Features two SPDT switches
Latchbolt Monitoring	LM	An internal SPDT switch that monitors the latchbolt to signal both egress and access of an opening.
Latchbolt Monitoring/ Request to Exit	RXLM	Two internal SPDT switches that monitor the latchbolt and the pushbar simultaneously.
Delayed Egress	DE	Delays egress for 15 or 30 seconds when unauthorized egress is initiated. Wall mount controller (2-679-0630) provides digital countdown display with verbal instructions or alarm tone only and must be ordered separately.
Motor Driven Electric Latch Retraction	MLR	Provides the means of locking or unlocking exit devices remotely using an electric motor. Recommend Hager 2903 or 2904 Power Supply.
Motor Driven Electric Latch Retraction with Request to Exit	MLRX	Provides the means of locking or unlocking exit devices remotely using an electric motor, along with an SPDT switch. Recommend Hager 2903 or 2904 Power Supply.

ELECTRICAL SPECIFICATION/RATINGS AND WIRE REQUIREMENTS

Electrical Specifications/ Ratings:

- ED; .225 AMP @ 24 Volt +/- 2V
- RX or LM; 125 VAC (3 AMP current); 30 VDC (2 AMP current)
- ELR; Requires 2901/2902 power supply
- MLR; 1 AMP in rush @ 24 VDC +/- 2V, 400 mA holding

Wire Requirements:

- Status switches (i.e. RX, LM, etc.) require 2 wires per switch to monitor a normally open (NO) or normally closed (NC) position
- All devices provide 3 wires per switch so both NO and NC positions can be monitored
- Monitoring both positions will require 3 wires per switch

QUICK CONNECT

Available on ED, ELR, LM, MLR, and RX

POWER SUPPLIES

PRODUCT #	DESCRIPTION
2901	For use with 4500/4600 Series electric latch retraction (ELR)
2902	For use with 4500/4600 Series electric latch retraction in a day/night mode of operation (ELR)
2903	Provides 24 Volt DC power for Fail Safe or Fail Secure locking devices and interface with building alarm controls, card readers, keypads, and other door controls
2904	Provides 24 Volt DC power and control for openings with an electrified locking device and automatic door operator
2908	Provides up to 1 amp of 12 or 24 Volt DC power - modular
2909	Provdes up to 2 amps of 12 or 24 Volt DC power - modular

ALARMED DEVICES - SPECIFY WHEN ORDERING: (Note: Alarm kit components may be purchased separately)

ALK - Alarm Kit

ALM - ALK with Latch Monitor Switch

ALT - ALK with Tamper Switch

ALL - ALK with Latch Monitor and Tamper Switch

4600 SERIES - ESCUTCHEON TRIM

WARRANTY | Lifetime on hardware components

SPECIFICATIONS

Escutcheon: | 1-11/16" x 7-7/8" (43 mm x 200 mm)

LEVERS | Archer, August, William or Withnell Levers

FINISHES |
- US3, US4, US10, US10B, US26, US26D (Not Available in US32D), BLK
- Anti-Microbial available with US26D

46BE
Blank Escutcheon
ANSI Function: 14 - Always operable (passage)

46CE
Cylinder Escutcheon
ANSI Function: 08 - Key locks or unlocks lever
Cylinder: Requires 3902 mortise cylinder with 3976 L cam (sold separately)

46DT
Dummy Trim
ANSI Function: 02 - Pull when device is dogged down

46NK
Night Lever
ANSI Function: 09 - Key locks or unlocks lever. Lever is locked when key is removed.
Cylinder: Requires 3902 mortise cylinder, with 3976 L cam (sold separately)

46NL
Night Latch
ANSI Function: 03 - Key retracts latchbolt
Cylinder: Requires 3901 rim cylinder with long tailpiece (sold separately)
Notes: Maximum door thickness compatibility is 2-1/2" (38 mm)

RIM Cylinder by Optional Pull
ANSI Function: 03 - Key retracts latchbolt
Finishes: US3, US4, US10, US10B, US26, US26D, US32D, BLK
Cylinder: Requires 3901 rim cylinder (sold separately). Standard (attached) and long tailpieces in every box.
Notes:
- For use with 4600 RIM
- For pull options see Trim & Auxiliary section

4600 SERIES - ESCUTCHEON TRIM - LEVER OPTIONS

ARCHER LEVER

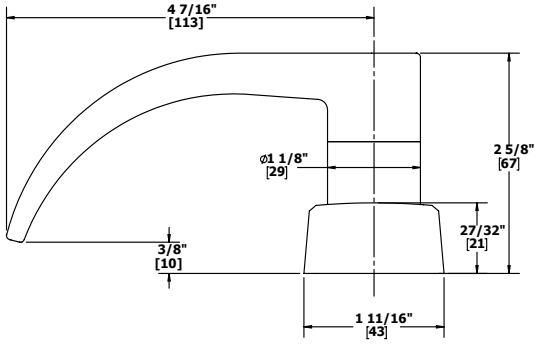

AUGUST LEVER

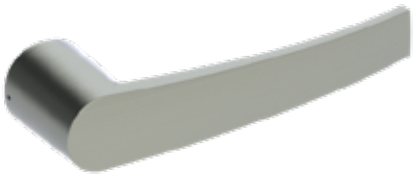

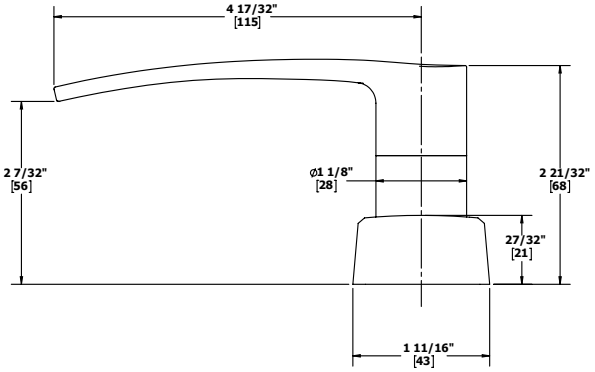

WILLIAM LEVER

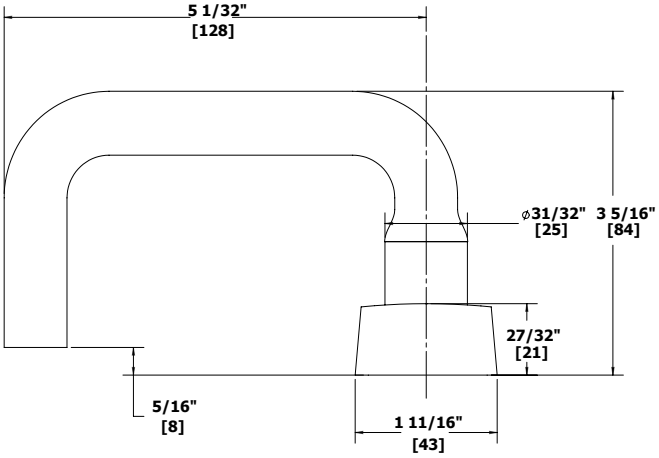

WITHNELL LEVER

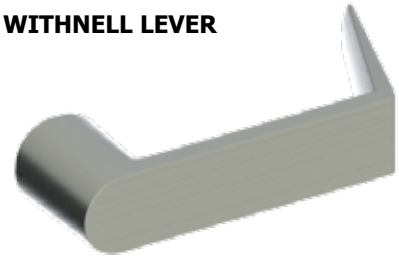

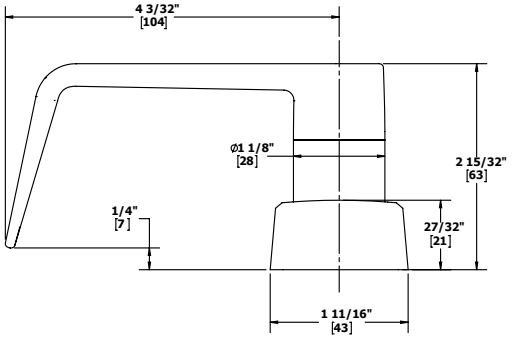

HAGER COMPANIES

4600 SERIES - STRIKES

4920
Strike
Optional strike to be used with 4600 Series Rim exit device; not for fire-rated doors

Finishes: US32D
Notes: For standard surface mounted applications

4920F
Fire-rated Strike
Included standard with 4600 Series Fire-rated Rim exit device

Finishes: US32D
Notes: For standard surface mounted applications

4950
Blade Stop Strike
Included standard with 4600 Series Rim exit device; not for fire-rated doors

Finishes: US32D

4951
Single Rabbit Strike
Optional strike to be used with 4600 Series Rim exit device; not for fire-rated doors

Finishes: US32D

4952
Semi-Flush Mount Strike
Optional strike to be used with 4600 Series Rim exit device; not for fire-rated doors

Finishes: US32D

2-649-0250/2-649-0257
Photoluminescent
Push bar cover option for 4500 & 4600 Series exit devices

Description: 2-649-0250 - 4500/4600 36”
2-649-0275 - 4500/4600 48”
Features:
- Requires no wiring or maintenance
- Recharges with exposure to ambient light

4600 SERIES - ACCESSORIES

4925R
Cylinder Dogging Conversion Kit
Finishes: US3, US4, US10, US10B, US26, US26D, US32D, BLK, Anti-Microbial available with US26D and US32D
Packaging: One (1) each dogging plate, cylinder collar, cash box nut
Notes:
- Mortise cylinder 3902 with standard cam, sold separately
- Specify 36” (914 mm) or 48” (1219 mm)

4960R
Shim Kit
To be used with 4600 Series Rim exit device where a glass bead kit would interfere with exit device

Finishes: US3, US4, US10, US10B, US26, US26D, US32D, BLK
Packaging: Two (2) each 1/8” (3 mm) shims and appropriate fasteners

4965
Head Cover
For use with 4600 Series Rim exit device

Finishes: US3, US4, US10, US10B, US26, US26D, US32D, BLK, Anti-Microbial
Packaging: One (1) head cover and four (4) each M4 x 6mm MS

Standard

Flush

END CAPS

For use with all 4500 and 4600 Series exit devices

Packaging: One (1) each cap and bracket plus fasteners
Finishes: Anti-Microbial available with US26D and US32D

	Standard	Flush
US3	(2-649-0038)	(2-649-0218)
US4	(2-649-0039)	(2-649-0220)
US10	(2-649-0040)	(2-649-0214)
US10B	(2-649-0041)	(2-649-0215)
US26	(2-649-0042)	(2-649-0216)
US26D	(2-649-0043)	(2-649-0217)
US32D	(2-649-0044)	(2-649-0219)
BLK	(2-649-5013)	(2-659-5012)

4700 Series

STANDARD DUTY APPLICATION

The Hager 4700 Series is designed and engineered to provide superior performance on standard stile doors in a range of light commercial and standard duty applications. Properly applied and maintained Hager 4700 Series Exit Devices and Trim are backed by a five-year warranty. Go to www.hagerco.com for specific warranty conditions.

Hager 4700 Series Exit Devices meet Life Safety codes and Fire Safety requirements. The 4700 Series Rim device meets the requirements for a Severe Windstorm Resistant Component.

Made with superior materials and with dead locking stainless steel Pullman type latchbolts, the 4700 Series Exit Devices provide necessary security and performance at economy pricing.

4700 SERIES - COMPLIANCE AND CERTIFICATIONS

4700 SERIES

	RIM	SVR
UL305 Listed for Panic Hardware	YES	YES
UL10C Positive Pressure Rated	YES	YES
UL10B Neutral Pressure Rated	YES	YES
Complies with ANSI A117.1 for Accessible Buildings and Facilities	YES	YES
ANSI A 250.13 Severe Windstorm Resistant Componet	YES	---

4700 SERIES FIRE-RATED DEVICES

	RIM F	SVR F
UL/cUL Listed for "A" Label Door Up to and Including...	3 HR 4'X8'	---
UL/cUL Listed for "B" Label Door Up to and Including...	---	90 MIN 4'X8'
Rim with Fire-rated Removable Mullion 4900UF UL/cUL Listed and Warnock Hersey Listed for "A" Label Door Up to and Including...	3 HR 8'X8'	---
VR X VR SAME DIRECTION* UL/cUL Listed for "A" Label Door Up to and Including...	---	90 MIN 8'X8'
VR X VR Double Egress UL/cUL Listed for "A" Label Door Up to and Including...	---	90 MIN 8'x8'

*Currently, no door manufacter offers a listing over 90 minutes with doors swinging same direction. Consult wood door manufactuers for current UL listings.

4700 SERIES - GENERAL INFORMATION

Installation Made Easy
For the convenience of our customers, Hager Companies introduced several key features to the exit device market.

- Thru-bolts are included with every model. Wood and machine screws are also provided standard in every package.
- Slotted strikes speed up installation, allowing the installer to make easy adjustments to align the latch to the strike.
- Escutcheon trim is surface mounted with the locking mechanism built inside, reducing door preparation and installation time by requiring fewer holes in the door.

Shim Kits
Shim kits are available for devices on doors with glass bead kits or other interfacing moldings. Each kit contains two 1/8" (3.2 mm) shims and the appropriate longer fasteners.

Sizing
The exit device is cut for 36" (914 mm) and 48" (1219 mm) wide doors. For other door widths, cut exit device to appropriate length. Recommended overall length of exit device is equal to the door width minus four inches. The surface vertical rod devices are supplied for an 84" (2134 mm) opening standard, but can be ordered for a 96" (2438 mm) opening. Extension rods are available to accommodate openings taller than 96" (2438 mm) up to 120" (3048 mm).

Trim Functions	Part Number	Function Description	ANSI Number
Passage	47BE* 47BT 47KP	Always operable (*specify handing when ordering)	14
Classroom	47CE* 47KE	Key locks or unlocks lever (*specify handing when ordering)	08
Dummy	47DT* 47KD 47PD 47RD	Pull when device is dogged down (*specify handing when ordering)	02
Night Latch	47NL* 47KN 47PN 47RN	Key retracts latchbolt (*specify handing when ordering)	03
Cylinder Thumbpiece	47PT	Key locks or unlocks thumbpiece	05

Applications

Single Door (Rim Device)

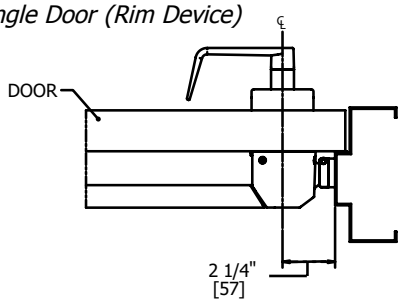

Double Door with Mullion (Rim x Rim)

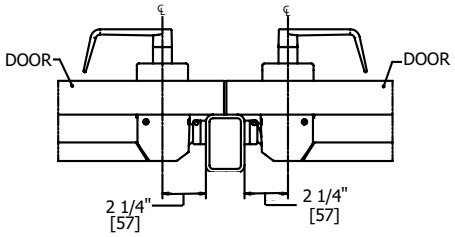

Double Door (SVR x SVR)

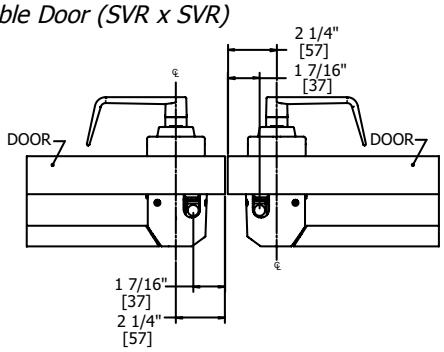

Double Door (SVR x Rim)

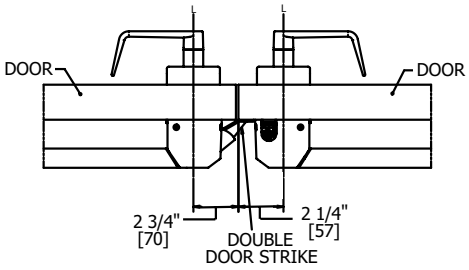

4700 SERIES - DEVICE PROFILE

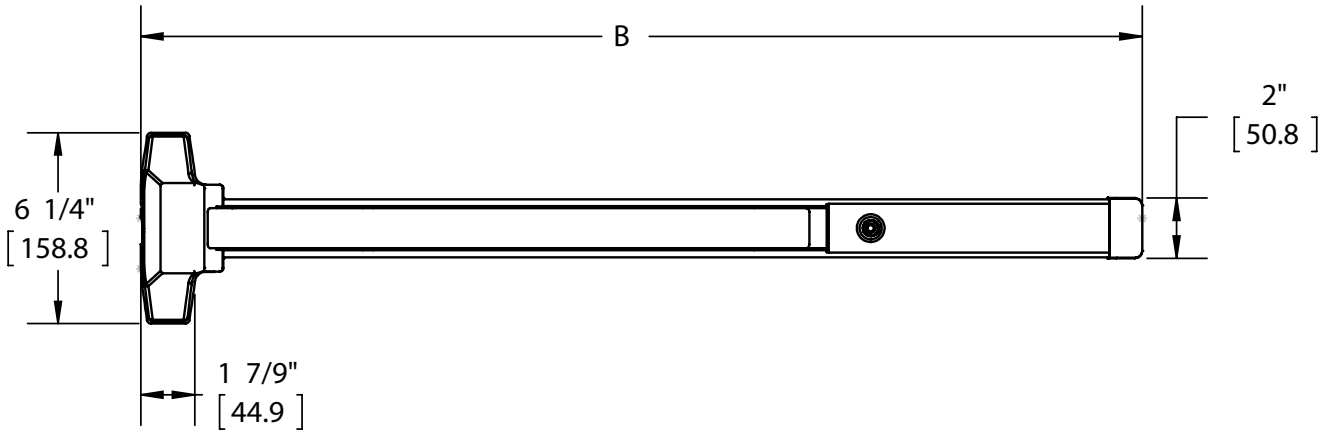

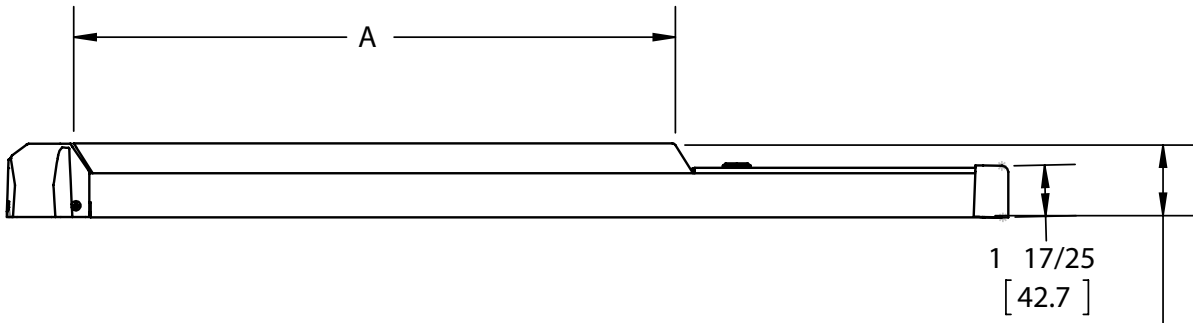

2 7/16" (62 mm) in undogged position
1 3/16" (30 mm) in dogged position

4700 SERIES	A	B
4700 PANIC - 36"	19 45/64 (500mm)	32 51/64 (833mm)
4700 FIRE - 36"		
4700 PANIC - 48"	24 29/64 (621mm)	44 51/64 (1137mm)
4700 FIRE - 48"		

4700 SERIES - HOW TO ORDER

4700 SERIES EXIT DEVICE

4701 — **Product Group**
4700 Series, Standard Duty

RIM — **Type**
RIM - Rim Device
SVR - Surface Vertical Rod

F — **Rating**
F - Fire Rated
0 - Non-Fire Rated

36” — **Size**
36”
48”
36” x 84”
36” x 96”
48” x 84”
48” x 96”

US3 — **Finish**
US3
US32D
ALM
DBZ

2” — **Door Thickness**
1-5/8”
1-3/4“
2”
2-1/4”

4700 SERIES TRIM

47 — **Product Group**
47 - 4700 Series, Standard Duty

CE — **Trim/Function**
CE - Cylinder Escutcheon
BE - Blank Escutcheon
NL - Night Latch
DT - Dummy Trim
KD - Key in Lever - Dummy Trim
KE - Key in Lever - Entrance
KN - Key in Lever - Night Latch
KP - Key in Lever - Passage
PD - Pull Plate Dummy Trim
PN - Pull Plate Night Latch
RD - Raised Lip Pull - Dummy Trim
RN - Raised Lip Pull - Night Latch
BT- Thumbpiece Pull Plate, Passage
PT- Thumbpiece Pull Plate, Entrance

RH — **Handing**
RH - Right Handed / LHR
LH - Left Handed / RHR

ARC — **Lever Style**
ARC - Archer
AUG - August
WTN - Withnell
APL - Apollo knob

US3 — **Finish**
US3
US32D
ALM
DBZ

2” — **Door Thickness**
1-5/8”
1-3/4“
2”
2-1/4”

TW — **Options**
TW - Tactile Warning
A - Antimicrobial Coating

Notes:
1. Handing is required for the 4700 Series trim.
2. Cylinders sold separately.
3. For more cylinder information, please refer to Cylinder, Core & Keying in the Locks section of the catalog.
4. Maximum door thickness compatibility for key-in-lever (Entrance, Night Latch, and Passage) trim is 1-3/4” (44 mm)

4700 SERIES - STANDARD DUTY RIM DEVICE

WARRANTY

Five-year warranty

FEATURES

Certification:	Meets life safety codes and fire-safety requirements. See charts on page 44 for details and options.
Covers:	Cast brass, bronze, stainless steel, zinc
Cover Tube:	Painted steel, plated steel, stainless steel
Dogging:	Hex dogging feature standard on non-fire labeled doors
End Caps:	Painted steel, plated steel, stainless steel
Fasteners:	• Wood and machine screws • Thru-bolts supplied standard
Latchbolt:	3/4" (19 mm) throw, pullman type with automatic dead-latching, stainless steel
Strikes:	• Stainless steel with stainless steel pin and roller - included standard with panic and fire-rated devices • Surface applied to frame with slotted holes for easy adjustment • Optional double door strike for use with surface vertical rod and rim devices

SPECIFICATIONS

Door Thickness:	1-3/4" (44 mm) - Standard
Door Width:	• 36" (914 mm) field sizeable to 30" (762 mm) door • 48" (1219 mm) field sizeable to 36" (914 mm) door
Projection:	• 2-7/16" (62 mm) in undogged position • 1-3/16" (30 mm) in dogged position
Stile Width:	• 4-1/2" (114 mm) - minimum stile width required for single door and 5/8" (16 mm) stop • 4-1/2" (114 mm) - minimum stile width required for double door x surface vertical rod device with double door strike • 3-3/4" (95 mm) - minimum stile width required for double door x mullion x 4920 strike • 5" (127 mm) - minimum stile width required for double doors with 2" (5 1 mm) mullion • All stile widths are measured from door edge
Notes:	• Cylinders sold separately • Escutcheon and thumbpiece pull plate trim is handed • Apollo knob is not ADA compliant • Recommended for use on appropriately reinforced doors

TRIM

- 4700 Series escutcheon trim for rim device is available with a variety of lever options (p. 51)
- 4700 Series key-in-trim is available with a variety of lever options plus a knob option (p. 53)
- Pull plate trim
- Raised lip pull
- Rim cylinder x optional pull

FINISHES

US3, US32D, ALM, DBZ

4700 SERIES - STANDARD DUTY SURFACE VERTICAL ROD DEVICE

WARRANTY

Five-year warranty

FEATURES

Certification:	Meets life safety codes and fire-safety requirements. See charts on page 44 for details and options.
Covers:	Cast brass, bronze, stainless steel, zinc
Cover Tube:	Painted steel, plated steel, stainless steel
Dogging:	Hex dogging feature standard on non-fire labeled doors
End Caps:	Painted steel, plated steel, stainless steel
Fasteners:	• Wood and machine screws • Thru-bolts supplied standard
Latchbolt:	• Top - 3/8" (9 mm) throw with automatic dead-latching, stainless steel • Bottom - 3/8" (9 mm) throw held retracted during door swing, stainless steel
Strikes:	• Stainless steel with stainless steel pin and roller - included standard with panic and fire-rated devices • Surface applied to frame with slotted holes for easy adjustment • Optional double door strike for use with surface vertical rod and rim devices • Optional threshold strike for use with saddle threshold

SPECIFICATIONS

Door Thickness:	1-3/4" (44 mm) - Standard
Door Width:	• 36" (914 mm) field sizeable to 30" (762 mm) door • 48" (1219 mm) field sizeable to 36" (914 mm) door
Projection:	• 2-7/16" (62 mm) in undogged position • 1-3/16" (30 mm) in dogged position
Vertical Rods:	• Rods for 7' (2134 mm) doors - 35-1/4" (895 mm) top rod length • Rods for 8' (2438 mm) doors - 47-1/4" (1200 mm) top rod length • Extension rod kits available, 2' (610 mm) or 3' (914 mm) for doors over 7'
Stile Width:	• 4-1/2" (114 mm) - minimum stile width required for single door and 5/8" (16 mm) stop • 4" (102 mm) - minimum stile width required for double doors • 4-1/2" (114 mm) - minimum stile width required for double door x Rim device with double door strike • All stile widths are measured from door edge
Notes:	• Escutcheon and thumbpiece pull plate trim is handed • Apollo knob is not ADA compliant • Recommended for use on appropriately reinforced doors

TRIM

- 4700 Series escutcheon trim for vertical rod device is available with a variety of lever options (p. 51)
- 4700 Series key-in-trim is available with a variety of lever options plus a knob option (p. 53)
- Pull plate trim
- Raised lip pull
- Rim cylinder x optional pull

FINISHES

US3, US32D, ALM, DBZ

4700 SERIES - ESCUTCHEON TRIM

WARRANTY | Five-year warranty

SPECIFICATIONS

Escutcheon:	1-11/16" x 7-7/8" (43 mm x 200 mm)
Handing:	Specify when ordering
Door Thickness:	For doors thicker than 1-3/4" or when used with a shim kit, must specify total door thickness

LEVERS | Archer, August or Withnell Levers

FINISHES | ALM, DBZ, US3, US32D

47BE
Blank Escutcheon
ANSI Function: 14 - Always operable (Passage)

47CE
Cylinder Escutcheon
ANSI Function: 08 - Key locks or unlocks lever
Cylinder: Requires 3902 mortise cylinder with standard cam (sold separately)

47DT
Dummy Trim
ANSI Function: 02 - Pull when device is dogged down

47NL
Night Latch
ANSI Function: 03 - Key retracts latchbolt
Cylinder: Requires 3902 mortise cylinder with standard cam (sold separately)

4700 SERIES - ESCUTCHEON TRIM - LEVER OPTIONS

ARCHER LEVER

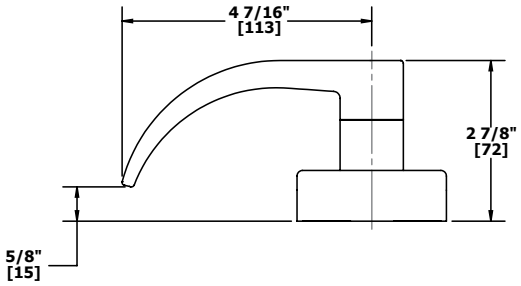

AUGUST LEVER

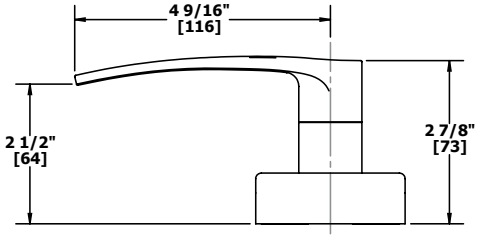

WITHNELL LEVER

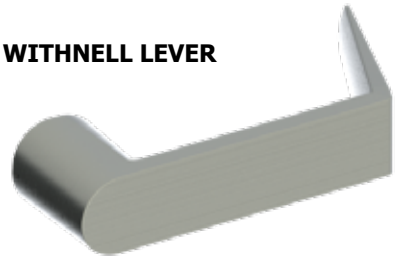

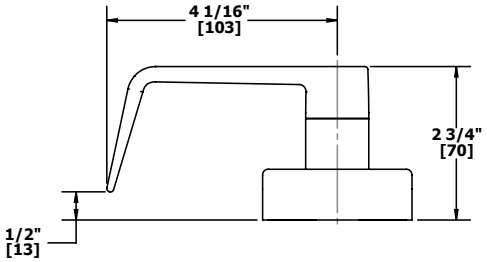

4700 SERIES - KEY-IN-LEVER TRIM

WARRANTY | Five-year warranty

SPECIFICATIONS

Rose Diameter: | 3-3/8" (86 mm)

Notes: | Apollo knob is not ADA compliant. Best used where accessibility is not an issue.

LEVERS/KNOB | Archer, August or Withnell Levers; Apollo Knob (47KE, 47KN, US32D only)

FINISHES | ALM, DBZ, US3, US32D

47KD
Key-in-Lever Dummy Trim
ANSI Function: 02 - Entrance by trim when actuating bar is locked down

47KE
Key-in-Lever Entrance
ANSI Function: 08 - Entrance by lever; key locks or unlocks lever
Cylinder:
- Standard core, C keyway - Standard
- Small Format Interchangeable Core available. 3981 core sold separately.

Keys: Two (2) brass keys per lock

47KN
Key-in-Lever Night Latch
ANSI Function: 03 - Entrance by trim when latchbolt is released by key; key is removable when locked
Cylinder:
- Standard core, C keyway - Standard
- Small Format Interchangeable Core available. 3981 core sold separately.

Keys: Two (2) brass keys per lock

47KP
Key-in-Lever Passage
ANSI Function: 14 - Entrance by trim when latchbolt is released by lever; always active, no cylinder

4700 SERIES - KEY-IN-LEVER TRIM - LEVER AND KNOB OPTIONS

ARCHER LEVER

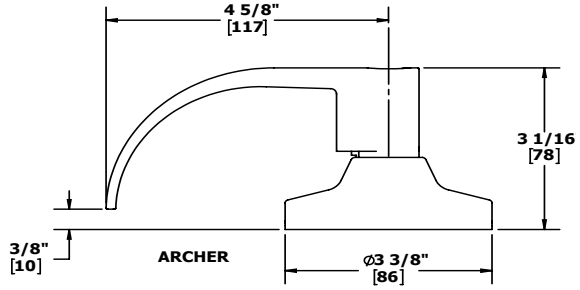

AUGUST LEVER

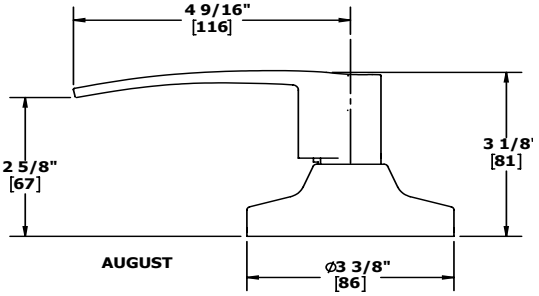

WITHNELL LEVER

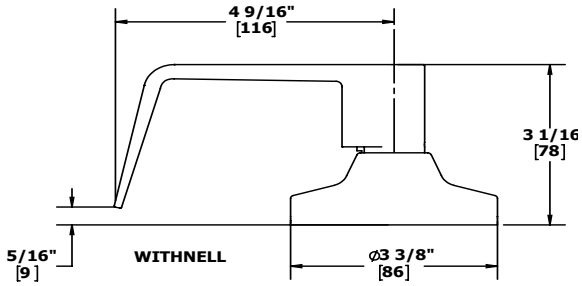

APOLLO KNOB

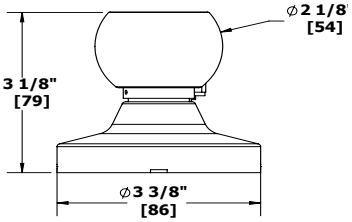

4700 SERIES - PULL PLATE TRIM

SPECIFICATIONS

Escutcheon:	• 47BT and 47PT - 3" x 14-5/8" (76 mm x 371 mm) • 47PD and 47PN - 3" x 11" (76 mm x 279 mm)
Projection:	1-3/4" (44 mm)
Pull CTC:	5-1/2" (140 mm)
FINISHES	• 47PD and 47PN - ALM, DBZ, US3, US32D • 47BT and 47PT - US32D

47PD
Dummy Trim

ANSI Function: 02 - Pull when device is dogged down

47PN
Night Latch

ANSI Function: 03 - Key retracts latchbolt
Cylinder: Requires 3901 rim cylinder (sold separately)
Notes: Supplied with retaining cup for use with 161 door prep

47BT
Passage

ANSI Function: 15 - Entrance by trim when latch is released by thumbpiece. Thumbpiece is always active.
Handing: Specify when ordering

47PT
Entrance

ANSI Function: 05 - Entrance by thumbpiece. Key locks or unlocks thumbpiece.
Cylinder: Requires 3902 mortise cylinder 1-1/8" to 1-3/8" with standard cam (sold separately)
Handing: Specify when ordering

4700 SERIES - RAISED LIP TRIM

SPECIFICATIONS

Size:	3" x 7-3/4" (76 mm x 197 mm)
Projection:	1" (25 mm)
FINISHES	ALM, DBZ, US3, US32D

47RD
Raised Lip Pull Dummy
Function: 02 - Pull when device is dogged down

47RN
Raised Lip Pull Night Latch
Function: 03 - Key retracts latchbolt
Cylinder: Requires the use of a Rim cylinder, 3901, sold separately
Notes: Retaining cup, 2-649-0137, included for 161 door prep

4700 SERIES - STRIKES

4910
Strike
Included standard with 4700 Series Rim exit device
Finishes: US32D
Notes: For use with panic- or fire-rated doors

4911
Double Door Strike
Optional strike for use with 4700 Series Surface Vertical Rod and Rim exit device
Finishes: US32D
Notes: Not for fire-rated doors

4913
Top Strike
Included standard with 4700 Series Surface Vertical Rod exit device
Finishes: US32D
Notes: For use with panic- or fire-rated doors

4914
Bottom Strike
Included standard with 4700 Series Surface Vertical Rod exit device
Finishes: US32D
Notes: For use with panic- or fire-rated doors

4915
Threshold Strike
Optional strike for use with surface vertical rod exit device and saddle threshold.
Finishes: US32D
Notes: Not for fire-rated doors

4700 SERIES - ACCESSORIES

4917
Bottom Latch Assembly
For use with 4700 Surface Vertical Rod exit device; not for fire-rated doors
Finishes: US3, ALM, DBZ, US32D
Packaging: One (1) bottom latch with cover and appropriate fasteners

4917F
Bottom Latch Assembly
For use with 4700 Surface Vertical Rod exit device; for fire-rated doors
Finishes: US3, ALM, DBZ, US32D
Packaging: One (1) bottom latch with cover and appropriate fasteners

4918
Top Latch Assembly
For use with 4700 Surface Vertical Rod exit device
Finishes: US3, ALM, DBZ, US32D
Packaging: One (1) top latch with cover and appropriate fasteners

4919
Top or Bottom Rod Replacement Kit
For use with 4700 Surface Vertical Rod exit device
Finishes: US3, ALM, DBZ, US32D
Packaging: One (1) each 47-1/4" (1200 mm) rod, rod guide, rod connector assembly, and appropriate fasteners

4931R
Shim Kit
To be used with 4700 Rim exit devices where a glass bead kit or molding would interfere with exit device
Finishes: US3, ALM, DBZ, US32D
Packaging: Two (2) each 1/8" (3 mm) shims and appropriate fasteners

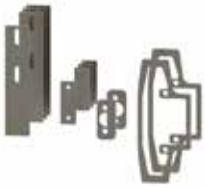

4931S
Shim Kits
To be used with 4700 Series Surface Vertical Rod exit devices where a glass bead kit or molding would interfere with exit device
Finishes: US3, ALM, DBZ, US32D
Packaging: Two (2) each 1/8" (3 mm) shims and appropriate fasteners

4933R
Head Cover
For use with 4700 Series Rim exit device
Finishes: US3, ALM, DBZ, US32D
Packaging: One (1) head cover with four (4) each M4 x 6 mm MS

4933S
Head Cover
For use with 4700 Series Surface Vertical Rod exit device
Finishes: US3, ALM, DBZ, US32D
Packaging: One (1) head cover with four (4) each M4 x 6 mm MS

4700 SERIES - ACCESSORIES

4934
Panic-Rated Dogging Plate

For use with 4700 Series exit devices
Finishes: US3, ALM, DBZ, US32D
Packaging: One (1) each dogging plate and hex key
Notes: Not for use on fire-rated device

END CAP

For use with all 4700 Series exit devices

Packaging: One (1) each cap and bracket plus fasteners

Finishes:

ALM	(2-649-0144)
DBZ	(2-649-0145)
US3	(2-649-0146)
US32D	(2-649-0147)

4934F
Fire-Rated Dogging Plate

For use with 4700 Series exit devices
Finishes: US3, ALM, DBZ, US32D
Packaging: One (1) each dogging plate

4936
24" Extension Rod Kit

For use with 4700 Series Surface Vertical Rod exit device
Finishes: US3, ALM, DBZ, US32D
Packaging: One (1) each 24" (610 mm) extension rod, rod connector, rod guide, plus wood and machine screws
Notes: Threaded on both ends; if cuts are required, cut the standard top rod on non-threaded end.

4937
36" Extension Rod Kit

For use with 4700 Series Surface Vertical Rod exit device
Finishes: US3, ALM, DBZ, US32D
Packaging: One (1) each 36" (914 mm) extension rod, rod connector, rod guide, plus wood and machine screws
Notes: Threaded on both ends; if cuts are required, cut the standard top rod on non-threaded end.

4900 Series

MULLIONS

Hager 4900 Series offers both a keyed removable mullion and a non-keyed removable mullion. Both are designed for use on double door openings with 4500, 4600 and 4700 Series Rim devices providing increased security and tighter closure, while providing easy adaptation for full width access. Our 4900 Series Mullions sets include a mullion tube, top and bottom brackets, and fasteners. Fire-rated mullions are UL listed for 3 hours on fire-rated pairs of doors up to 8 feet by 8 feet.

4900 SERIES - HOW TO ORDER

4900 SERIES MULLION SETS

4900 — **Product Group**
4900 Series, Mullions

U — **Type**
T - Keyed Removable Mullion
U - Non-Keyed Removable Mullion

F — **Fire Rating**
F - Fire Rated
0 - Non-Fire Rated

84″ — **Size**
84″
96″
10′ (120″)

USP — **Finish**
USP

Notes:
1. Keyed removable mullion requires 3901 rim cylinder (sold separately).
2. Fire rated strike and hook kits sold separately (4912 for use with 4500 Series fire-rated exit device and mullion or 4916 for use with 4700 Series fire-rated exit device and mullion).
3. Stabilizer kit 4953 (sold separately).

4900 SERIES - KEYED REMOVABLE MULLION

WARRANTY | One-year warranty

4900T/TF

SPECIFICATIONS

Certification:	UL/cUL/Warnock Hersey listed for fire-rated doors up to 8′ (2438 mm) x 8′ (2438 mm)
Cylinders:	• Solid brass 6-pin rim cylinders (3901, sold separately) • Standard core, C keyway - Standard • Small Format Interchangeable Core available (sold separately)
Mullion:	2″ x 3″ (51 mm x 76 mm) – 11 gauge steel tube
Fasteners:	• Four (4) 8 - 32 x 3/4″ (19 mm) FPHMS • Four (4) 5/16″ - 18 x 5/8″ (16 mm) FPHMS • Two (2) 5/16″ - 18 x 1-1/2″ (38 mm) FPHMS • Two (2) 3/8″ wedge anchors
Shims:	• 1/2″ (13 mm) and 5/8″ (16 mm) shims included (top) • 1/8″ (4 mm) shims included (bottom)
Strikes:	• Panic-rated mullions use standard Rim strike supplied with exit device • Fire-rated strike and hook kit 4912 (4500 or 4600 Series) or 4916 (4700 Series) must be purchased separately
Top Fitting:	• Dead latch on fire-rated device • Latching head allows the mullion to be removed in seconds • Mullion can be locked in place without the use of a key

FINISHES | USP - grey primer only

4900T

Mullion Set

Certification:	Panic-rated
Opening Height:	84″ (2134 mm), 96″ (2438 mm), 120″ (3048 mm)
Material:	11 gauge steel tube

4900TF

Fire-Rated Mullion Set

Certification:	UL fire-rated
Opening Height:	84″ (2134 mm), 96″ (2438 mm)
Material:	11 gauge steel tube

4900 SERIES - NON-KEYED REMOVABLE MULLION

WARRANTY | One-year warranty

4900U/UF

SPECIFICATIONS

Certification:	UL/cUL Listed for fire-rated pairs of doors up to 8’ (2438 mm) X 8’ (2438 mm)
Mullion:	• 2” x 3” (51 mm x 76 mm) – 11 gauge steel tube • Mullion easily removed by loosening top and bottom screws
Fasteners:	• Four (4) each 5/16” - 18 x 5/8” FHPMS (top bracket) • Two (2) each 5/16” - 18 x 1-1/2” FHPMS (top bracket) • Four (4) each 5/16” - 18 x 1-1/2” FHMS (bottom bracket)* • Four (4) each 5/16” - 18 masonry anchors (5/8” diameter x 7/8” long) (bottom bracket)** • Two (2) each 1/4” - 20 x 1-1/4” FHPMS (top fitting) • Two (2) each 1/4” - 20 thru bolts (top fitting) • Two (2) #10 - 24 x 3/8” FHPMS (top fitting) • One (1) 1/4 - 20 x 3/16” set screw (top fitting) • Fire-rated device - 5/16” - 18 x 1-1/4” FHMS, 5/16” - 18 masonry anchors (1/2” diameter x 1-1/2” long)
Shims:	• Two (2) each 1/2” (13 mm) and 5/8” (16 mm) shims included (top) • Two (2) 1/16” (1.6 mm) shims included (bottom)
Strikes:	• Panic-rated mullions use standard Rim strike supplied with exit device • Fire-rated strike and hook kit 4912 (4500 or 4600 Series) or 4916 (4700 Series) must be purchased separately

FINISHES | USP - grey primer only

4900U

Non-Keyed Removable Mullion Set

Certification:	Panic-rated
Opening Height:	84” (2134 mm), 96” (2438 mm), 120” (3048 mm)
Material:	11 gauge steel tube

4900UF

Fire-Rated Non-Keyed Removable Mullion Set

Certification:	UL fire-rated*
Opening Height:	84” (2134 mm), 96” (2438 mm),
Material:	11 gauge stainless steel tube

4900 SERIES - STRIKES AND STABILIZER KIT

4912
Fire-Rated Strike and Hook Kit for 4500 and 4600 Series

Finishes: US32D

Notes: Must order for use with fire-rated mullion and fire-rated Rim devices to ensure fire rating

4916
Fire-Rated Strike and Hook Kit for 4700 Series

Finishes: US32D

Notes:
- Must order for use with fire-rated mullion and fire-rated Rim devices to ensure fire rating

4953
Mullion Stabilizer Kit

Finishes: US32D

Notes: For use with mullion and exit devices for added security

4900T - CYLINDER

3901
Rim Cylinder

Conventional cylinder and Small Format Interchangeable Core sold separately. For more cylinder information, please refer to Cylinder, Core & Keying in the Lock section of this catalog.

4900T - ACCESSORIES

4902
Top/Bottom Bracket Set

Certification: Non-fire-rated

Function: Keyed Removable

Materials: Steel

Fasteners: Two (2) each MS #5/16 -18 x 1-1/2" FHP stainless; four (4) each MS #8-32 x 3/4" 100 degree FHP; four (4) each MS #5/16-18 x 5/8" FHP stainless zinc plated

Cylinder: Rim cylinder, 3901, sold separately

4902F
Fire-Rated Top/Bottom Bracket Set

Certification: Fire-rated

Function: Keyed removable

Materials: Steel

Fasteners: Two (2) each MS #5/16 - 18 x 1-1/2" FHP stainless; four (4) each MS #10 x 1" Type A FHP undercut stainless; four (4) each MS 10 - 24 x 5/8" FHP undercut stainless; four (4) each MS #5/16 - 18 x 5/8" FHP stainless zinc plated

Cylinder: Rim cylinder, 3901, sold separately

4907
Mullion Tube

Certification: Fire-rated up to 96" (2438 mm)

Opening Height: 84" (2134 mm), 96" (2438 mm), 120" (3048 mm)

Finishes: USP grey primer

Materials: Steel

Function: Keyed removable

4900 SERIES - 4900U ACCESSORIES

4904

Top/Bottom Bracket Set

Certification:	Non-fire-rated
Function:	Non-keyed removable
Materials:	Steel

4904F

Fire-Rated Top/Bottom Bracket Set

Certification:	Fire-rated
Function:	Non-keyed removable
Materials:	Steel

4905

Mullion Tube

Certification:	Fire-rated
Opening Height:	• 84″ (2134 mm) • 96″ (2438 mm) • 120″ (3048 mm)
Finishes:	USP grey primer
Materials:	Steel
Notes:	120″ (3048 mm) not fire-rated