Electrified Solutions

Hager Companies offers a range of electrified door hardware to help you meet customer expectations while also meeting building codes and ensuring life safety. Hager's complete electrified solutions are proven designs with versatile applications and simplified installation.

Hager's line of electric strikes fit any application. All of our strikes have compact designs, are non-handed, and can be field selectable to fail safe or fail secure configurations allowing for universal installations and simpler inventory management.

Table of Contents

Component Selection 3

Locking Devices 5
Electric Strikes 6
Delayed Egress 9
Magnetic Locks 13-21

Access Controls 23
Key Switches 24, 27
Keypads 25-26

Egress Devices 29
2972/2972 IET Exit Switch..... 30
2973 Code Compliant Exit Switch 31
2-679-0611/12 PIR Egress Sensor..... 32
2977 Piezoelectric Exit Switch 33
2978 Touchless Exit Switch..... 34
4801 Non-Latching Pressure Sense Push Bar 35
2-679-0708 Emergency Door Release 36
Electric Power Transfer Devices 37
Door Position Sensors..... 39
Power Supply & Door Controllers 41

Low Energy Power Operators 51
Component Selection..... 53
8400 Series 60
8200 Series 67
Actuators..... 75
Accessories..... 85

COMPONENT SELECTION

1 Locking Devices (Pages 5-21)

- Electric Strike
- Delayed Egress
- Electrified Lockset
- Exit Device
- Frame Actuator Lockset
- Magnetic Lock

Magnetic Lock

Delayed Egress Lock

Electric Strike

Electrified Cylindrical Lock

Magnetic Shear Lock

Exit Device

Electrified Mortise Lock

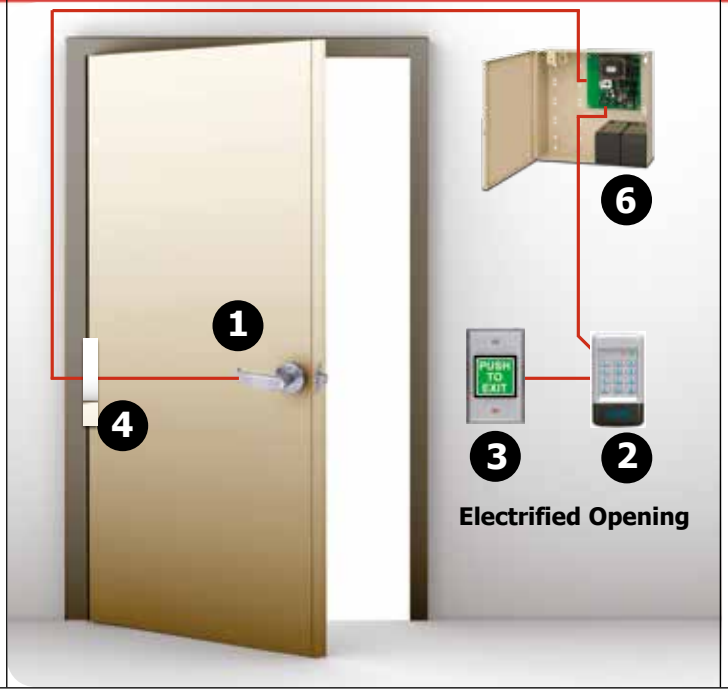

2 Access Controls (Pages 23-27)

Standalone or Network

- Keyswitch
- Digital Keypad
- Card Reader

Keyswitch

Digital Keypad

Keypad with Proximity

Under Desk Push Switch

3 Egress Devices (Pages 29-36)

- Exit Switch
- PIR Egress Sensor
- Exit Sense Bar
- Emergency Door Release

Exit Switch

Piezoelectric Exit Switch

Touchless Exit Switch

Egress Sensor

Non-Latching Pushbar

Emergency Door Release

4 Electric Power Transfer Devices (Pages 37-38)

Required With Locksets & Exit Devices

- Electric Power Hinge
- Power Transfer Loop
- Concealed Power Transfer
- Electrified Roton

2-679-0621
2-679-0623
Power Transfer

ETW4-10
Electric Hinges

5 Door Position Sensors (Pages 39-40)

2-679-0626
Magnetic Switch

6 Power Supply & Door Controllers (Pages 41-49)

2901
Power Supply
- Designed to operate exit devices equipped with electric latch retraction (ELR)

2902
Power Supply
- Designed to operate exit devices equipped with electric latch retraction with day/night mode feature (ELR)

2903
Power Supply
- Provides power for Fail Safe or Fail Secure locking devices
- 24 V output; 2 AMP capacity
- Filtered/regulated

2904
Power Supply
- Provides power and control for openings with an electrified locking device and automatic door operator
- 24 V output; 2 AMP capacity
- Filtered/regulated

2908
Power Supply
- Modular
- Provides power for Fail Safe or Fail Secure locking devices
- 12/24 V output; 1 AMP capacity
- Filtered/regulated

2909
Power Supply
- Modular
- Provides power for Fail Safe or Fail Secure locking devices
- 12/24 V output; 2 AMP capacity
- Filtered/regulated

Locking Devices

Hager offers a comprehensive product line of electronic locking devices ranging from strikes, delayed egress systems, and magnetic locks.

Electric door strikes allows for a range of functionality for any access control system. Ranging from an exterior door such as an employee entrance or an interior door such as a stairwell, Hager's electric strikes have a variety of universal features as well as factory configurations to accommodate a range of locksets, doors, frames, applications, and building codes.

Delayed egress systems are ideal for security, safety, and loss prevention applications. Many of Hager's delayed egress systems are installed in public facilities such as airports to control pedestrian traffic. Other Hager units are installed in brick and mortar retail stores to prevent theft while other installations include assisted living facilities to protect patients and childcare facilities to protect children.

Typically used on exit doors, when unauthorized egress is initiated when in the locked mode. The system delays egress through the door for 15 or 30 seconds (where approved). Meanwhile, the person exiting must wait while personnel or security respond. The door unlocks after 15 seconds has elapsed, permitting egress. A signal from the fire life safety system will release the lock for uninhibited egress in an emergency. Typical installations include airports, convention halls, wholesale stores, retail stores, long term care, drug and alcohol rehab, psychiatric care, infant nurseries, museums, art galleries, warehouses, and technological facilities.

Hager's magnetic locks are designed to be used on interior doors, perimeter exit doors, and entrances that require fail safe emergency release. Hager's magnetic locks have no moving parts and provides positive and instantaneous release, whether caused by a signal from the fire command center, remote control or access control.

HAGER COMPANIES

LOCKING DEVICES - 2925 ELECTRIC STRIKE

MODELS
2925

4-7/8" (124 mm) faceplate for aluminum, wood, and hollow metal frames

WARRANTY

One-year warranty

APPLICATION

- Cylindrical locksets with up to 5/8" (15mm) throw latch bolts
- Access controlled ingress for fail secure or fail safe openings (field selectable)
- Economy option provides great performance and value

Latch:

1/2" (13 mm) [5/8" (16 mm) with 1/8" (3 mm) door gap]

FEATURES

Components:

- Quick and easy installation with low profile 1-1/4" (32 mm) backset
- All stainless steel parts with durable diecast body for corrosion resistance
- Compact low profile design with internally mounted solenoid and factory supplied mounting tabs
- Non-handed (reversible)
- Latch status output (standard)

ELECTRICAL SPECIFICATIONS

Input:
Current/Voltage

200/100 mA @ 12/24VDC (Field selectable)

Monitoring:
Latch Status (Std)

SPDT, DRY 3A @ 30VDC

MECHANICAL SPECIFICATIONS

Dimensions:

1-1/4" (32 mm) W x 4-7/8" (124 mm) H x 1-1/4" (32 mm) D

ACCESSORIES

BUZZ

- Part no. 2-679-0028
- Plug-In Buzzer 12/24VDC
- Indicates fail secure strike is energized and unlocked

RECT

- Part no. 2-679-0029
- Converts AC to DC
- Wire leads

FINISHES

US32D

LOCKING DEVICES - 2928 MULTI-APPLICATION ELECTRIC STRIKE

MODELS

2928-SC
2928-RC
2928-6R
2928-7R

- 4-7/8" (124 mm) x 1-1/4" (32 mm) square corner faceplate
- 4-7/8" (124 mm) x 1-1/4" (32 mm) radius corner faceplate
- 6-7/8" (175 mm) x 1-1/4" (32 mm) radius corner faceplate
- 7-15/16" (202 mm) x 1-7/16" (36 mm) radius corner faceplate

WARRANTY

One-year warranty

APPLICATION

- Cylindrical and mortise locksets with up to 3/4" (19 mm) throw latch bolts with 1/8" door gap
- Access controlled ingress for fail secure or fail safe openings (field selectable)
- Field selectable voltage - 12/24V, AC/DC
- Ideal for medium traffic openings

Latch:

- 1/2" (13 mm)
- 5/8" (16 mm) with 1/8" (3 mm) door gap
- 3/4" (19 mm)

FEATURES

Components:

- Quick and easy installation with low profile 1-3/16" backset
- Latch position status (standard)
- Keeper locked/unlocked status (standard)
- Keeper open/closed and status (optional)
- Compact low profile design with internally mounted solenoid and factory supplied mounting tabs
- Non-handed (reversible)
- 1/4" (6 mm) horizontal alignment adjustment
- All stainless steel parts with durable diecast body for corrosion resistance
- Fewer moving parts for maximum life
- Stainless steel is standard with square corner faceplates
- Aluminum standard with radius corner faceplate
- Plug in tail connectors

Certification:

- ANSI A156.31, Grade 2

OPTIONS

KOC: Keeper/open closed status

ELECTRICAL SPECIFICATIONS

Inputs:
Current/Voltage

- 200/100 mA @ 12/24VDC
- 140/70 mA @ 12/24VAC

Monitoring:

Latch Status (Std.)	SPDT, Dry 3 A @ 30VDC
Keeper Locked Status (Std.)	SPDT, Dry 3 A @ 30VDC
Keeper Open Status (Opt.)	SPDT, Dry 3 A @ 30VDC

MECHANICAL SPECIFICATIONS

Dimensions: 1-1/4" (32 mm) W x 4-7/8" (124 mm) H x 1-3/16" (30 mm) D

ACCESSORIES

BUZZ

- Part no. 2-679-0028
- Plug-In Buzzer 12/24VDC
- Indicates fail secure strike is energized and unlocked

FINISHES

- US32D (2928-SC only)
- ALM (standard with 2928-RC, 2928-6R, 2928-7R)

HAGER COMPANIES

LOCKING DEVICES - 2930 UNIVERSAL APPLICATION ELECTRIC STRIKE

MODELS
2930-CYL
2930-MOR
2930-MDB

- For use with Grade 1 cylindrical locksets
- For use with Hager mortise locks
- For use with Hager mortise locks with deadbolt

WARRANTY

One-year warranty

APPLICATION

- Heavy duty electric strike
- Designed for installation in hollow metal frames with Grade 1 cylindrical and mortise locksets with up to 3/4" (19 mm) throw latch bolts and 1" deadbolts (25 mm)
- Designed for new construction and retrofit applications
- Field selectable fail safe or fail secure (default setting) with no disassembly
- For use on fire-rated and non fire-rated doors
- *Fail safe is not permitted on fire-rated doors*

FEATURES

Components:

- Retrofits existing ANSI 4-7/8" (124 mm) strike prep - no centerline relocation
- Fail secure standard; field reversible to fail safe (no disassembly)
- Up to 3/4" (919 mm) latch bolt and 1" (25 mm) deadbolt
- Non-handed (reversible)
- 1/8" (3 mm) horizontal alignment adjustment
- Factory tested 2,500 lbs.
- Exceeded 1,000,000 cycles
- UL tested 1,500 lbs.
- 70 ft-lb dynamic strength
- Internally mounted solenoid, no heat in keeper
- Tamper resistant
- All stainless steel parts with durable diecast body for corrosion resistance
- Plug in tail connectors

Certification:

- ANSI A156.31 compliant, Grade 1
- UL - 1034 Burglary Resistant (interior use application)
- BP - 10254
- IL10C.3H Fire-Rated, 4' x 8' door
- NFPA 252
- CAN 4-5104 (Fail Secure Only)

ELECTRICAL & MECHANICAL SPECIFICATIONS

Input: Current/Voltage	600/300 mA @ 12/24V DC
Monitoring:	
LBM (Opt.)	SPDT, Dry 5 A @ 30V DC
DSM (Opt.)	SPDT, Dry 5 A @ 30V DC
DBM (Opt.)	SPDT, Dry 5 A @ 30V DC *(Handed)*

ACCESSORIES

BUZZ

- Part no. 2-679-0028
- Plug-In Buzzer 12/24 VDC
- Indicates fail secure strike is energized and unlocked

RECT

- Part no. 2-679-0029
- Converts AC to DC
- Wire leads

FINISHES

US4, US10, US10B, US26, US26D, US32D (standard)

OPTIONS

LBM

- Latch Bolt Monitor
- Door closed/latched or open/unlatched status
- Access control anti-tailgate/timer reset signal

DSM

- Door Secure Monitor (DSM)
- Door secure and unlocked monitoring
- Mantraps, interlocks, airlocks

DBM

- Deadbolt Monitoring (DBM - Handed)
- Signals deadbolt projected or retracted
- Occupied signal rooms/bathrooms
- Manual lockout of access control by deadbolt

NOTES

Fire-Rated: Not approved for fail safe operation on fire-rated doors

Handing:

- CYL, MOR with monitoring are non-handed
- DBM with monitoring is handed

LOCKING DEVICES - ON BOARD DELAYED EGRESS

MODELS
4501 OBDE/
4601 OBDE

On Board Delayed Egress Exit Device

WARRANTY

One-year warranty

APPLICATION

- Control pedestrian traffic
  - *Airport & Public Facility Security and Safety*
  - *Loss Prevention*
- Wandering Patient and Infant Protection (Compatible with Hugs® and other patient tracking systems)
- Intended for single or double doors that require panic hardware

FEATURES

Components

- 15 (or optional 30) second egress delay
- 1 or 2 second nuisance delay
- Built-in function keypad provides alarm and lock reset, 1 to 30 second bypass, sustained bypass, and additional key switch
- Control inputs include 1 to 30 second request-to-exit and access bypass with anti-tailgate and alarm reset
- Field selectable trigger modes from exit device (N/O or N/C)
- Field selectable automatic or manual power up after emergency release or power loss

Built-In Annunciation:

- Armed mode
- Nuisance mode
- Irreversible egress mode
- Release mode
- Digital countdown display
- Field selectable voice notification or tone
- Field selectable male voice with security message or female voice with safety message

Monitoring Outputs:

- Armed status
- Egress initiation status
- Released status

Power Up Modes: Field selectable automatic or manual power up after emergency release or power loss

Code Compliance:

- Use of manual power up complies with California Building Code (OSHPD) requirements
- International Fire Code (IFC) 1008.1.8.6 Delayed Egress Locks
- International Building Code (IBC) 1008.1.8.6 Delayed Egress Locks
- NFPA 101, Life Safety Code 7.2.1.6.1 Delayed Egress Lock
- NFPA 1 Uniform Fire Code
- California Building Code (CBC) 1008.1.8.6 Special Egress Control Devices

Note:

- Requires 3902 Mortise Cylinder, sold separately (Conventional Core Only, 1-1/8" length recommended)
- Exit Device cannot be cut down once the OnBoard Delayed Egress modification has been made to the device
- Requires Mortise Cylinder, sold separately

ELECTRICAL SPECIFICATIONS

Inputs:

Voltage Input:

- Single 430mA @ 24VDC
- Tandem 680mA @ 24CVDC

Reset Input: N/O, Dry input
REX Input: N/C, Dry input
Trigger: N/C, Dry input

LOCKING DEVICES - ON BOARD DELAYED EGRESS

Monitoring Outputs:	Alarm relay - 1 amp @ 30VDC SPDT, Dry Door security relay - 1 amp @30VDC SPDT, Dry

MONITORING

Alarm Output:	SPDT Dry, 1A @ 30 VDC, Dry
Locked Output:	SPDT Dry, 1A @ 30 VDC, Dry

CONTROL INPUTS:

- Field selectable 1-30 second request to exit with anti-tailgate and door prep alarm
- Bypass
- Reset
- Remote trigger (for pairs of doors)
- BPS (required for door forced, prop and anti-tailgate)

FINISHES

- US3
- US4
- US10
- US10B
- US26
- US26D
- US32D

LOCKING DEVICES - DELAYED EGRESS

MODELS

4501 DE/4601 DE	Delayed Egress Exit Device
2-679-0630	Delayed Egress Wall Mount Controller - *Must be ordered separately*

WARRANTY One-year warranty

APPLICATION
- Control pedestrian traffic
  - *Airport & Public Facility Security and Safety*
  - *Loss Prevention*
- Wandering Patient and Infant Protection (Compatible with Hugs® and other patient tracking systems)
- Intended for single or double doors that require panic hardware

FEATURES

Components:
- Alternating 85 db tone and voice message (75 db @ 3 feet)
  - *Voice and digital display provides informative annunciation for people without prior knowledge, including the blind and hearing impaired*
  - *Voice provides warning or safety message, countdown and time of door release*
  - *Digital countdown display indicated if the door was opened after lock release*
- 15 or 30 second egress delay
- 1 or 2 second nuisance delay
- Built-in function keypad provides alarm and lock reset, 1 to 30 second bypass, sustained bypass, and additional key switch
- Control inputs include 1 to 30 second request-to-exit and access bypass with anti-tailgate and alarm reset
- Field selectable trigger modes from exit device (N/O or N/C)
- Field selectable automatic or manual power up after emergency release or power loss

Built-In Annunciation:
- Armed mode
- Nuisance mode
- Irreversible egress mode
- Release mode
- Digital countdown display
- Field selectable voice notification or tone
- Field selectable male voice with security message or female voice with safety message

Monitoring Outputs:
- Armed status
- Egress initiation status
- Released status

Power Up Modes: Field selectable automatic or manual power up after emergency release or power loss

Code Compliance:
- Use of manual power up complies with California Building Code (OSHPD) requirements
- International Fire Code (IFC) 1008.1.8.6 Delayed Egress Locks
- International Building Code (IBC) 1008.1.8.6 Delayed Egress Locks
- NFPA 101, Life Safety Code 7.2.1.6.1 Delayed Egress Lock
- NFPA 1 Uniform Fire Code
- California Building Code (CBC) 1008.1.8.6 Special Egress Control Devices

ELECTRICAL SPECIFICATIONS

Inputs:

Voltage Input:
- Single 430mA @ 24VDC
- Tandem 680mA @ 24CVDC

Reset Input: N/O, Dry input
REX Input: N/C, Dry input
Trigger: N/C, Dry input

Monitoring Outputs:	Alarm output - 1 amp @ 30VDC SPDT, Dry Locked output - 1 amp @30VDC SPDT, Dry

MONITORING

Alarm Output:	SPDT Dry, 1A @ 30 VDC, Dry
Locked Output:	SPDT Dry, 1A @ 30 VDC, Dry

MECHANICAL SPECIFICATIONS

Controller Dimensions:	6-1/2" (165 mm) W x 4-1/2" (114 mm) H x 1-1/2" (38 mm) D
Controller Mounting:	Recessed or Surface Mount

ACCESSORIES

2-679-0641	3-gang interior surface mount box
2-679-0642	Shroud for surface mount box

FINISHES

Controller:

- Aluminum anodized (standard)
- Dark Bronze anodized
- Black anodized

NOTES

- SVR exits must include rod covers
- Door position switch (DPS) is recommended for higher security. Contact Hager Tech Support for additional information.

LOCKING DEVICES - 2958 INTEGRATED DELAYED EGRESS LOCK

MODELS

2958 — Single magnetic lock with 1650 lbs. holding force (748 kg)

2958T — Tandem magnetic lock with 1650 lbs. holding force (748 kg)

WARRANTY

One-year warranty

APPLICATION

- Control pedestrian traffic
  - *Airport & Public Facility Security and Safety*
  - *Loss Prevention*
- Wandering Patient and Infant Protection (Compatible with Hugs® and other patient tracking systems)
- Intended for single doors with latching or non-latching hardware
- Tandem model intended for use with pairs of doors with latching or non-latching hardware where activating the lock unlocks both doors

FEATURES

Components:

- Field selectable voice and tone or tone only (75 db @ 3 feet)
  - *Voice and digital display provides informative annunciation for people without prior knowledge, including the blind and hearing impaired*
  - *Voice provides warning or safety message, countdown and time of door release*
  - *Digital countdown display indicated if the door was opened after lock release*
- Choice of 15 second exit and 1 second nuisance delay or field selectable 15 or 30 second exit delay and 1 or 2 second nuisance delay
- Field selectable security or safety message
- Field selectable activation
- Field selectable automatic or manual relock upon power up after emergency release
- Integrated 3 position key switch
  - *Provides lock and alarm reset Manual power up sustained bypass, time bypass, adjustment for 1, 15, 20 or 30 seconds*
- Field selectable door prop alarm
  - *Alarm sounds when the door has been left open after selected bypass time has elapsed*
- Anti-tailgate feature
- Alternating 85db tone and voice message

Control Inputs:

- Remote access control and REX input, field adjustable for 1, 15, 20, or 30 seconds
- Remote reset input
- Manual power-up input
- Emergency release input
- Anti-tailgate input

Monitoring Outputs:

- Door secure and unlocked output
- Delayed egress activation alarm output

Certifications: ANSI certified, ANSI Grade 1

Code Compliance:

- International Building Code (IBC) 1008.1.8.6 Delayed Egress Locks
- International Fire Code (IFC) 1008.1.8.6 Delayed Egress Locks
- NFPA 101, Life Safety Code 7.2.1.6.1 Delayed Egress Lock
- California Building Code (CBC) 1008.1.8.6 Special Egress Control Devices
- BOCA, National Building Code 1017.4.1.2 Special Locking Arrangements
- Chicago Building Code 10 (13-160-269) Electromagnetic Locking Devices
  - *Certificate of approval available*

LOCKING DEVICES - 2958 INTEGRATED DELAYED EGRESS LOCK

OPTIONS

DPS	Door Position Switch
MBS	Magnetic Bond Sensor
ATS	Anti-Tamper Switch

RESET & CONTROL

PS	Built-in reset push switch, available with NFPA (NA) only
NS	Less key switch or push switch
Input Voltage:	Auto Sensing 12 to 24VDC
Current:	
2958	830mA @ 12VDC 450mA @ 24VDC
2958T	1500mA @ 12VDC 850mA @ 24VDC
Reset Input:	N/O, Dry input
REX Input:	N/O, Dry input
Trigger Input:	N/O, Dry input
Fire Alarm Input:	N/O, Dry input

MONITORING

Alarm Output:	SPDT Dry, 1A @ 30VDC
Lock Secure Unlocked:	SPDT Dry, 1A @ 30VDC
Door Position Switch:	SPDT Dry, 250mA @ 30VDC
Magnetic Bond Sensor:	SPDT Dry, 250 mA @ 30VDC
Anti-Tamper Switch:	SPDT Dry, 1A @ 30VDC

MECHANICAL SPECIFICATIONS

Dimensions:	
2958	11” (279 mm) W x 2-3/4” (70 mm) H x 2-5/8” (67 mm) D
2958T Master	11” (279 mm) W x 2-3/4” (70 mm) H x 2-5/8” (67 mm) D
2958T Slave	11” (279 mm) W x 2-3/4” (70 mm) H x 2-5/8” (67 mm) D
Armature	7-3/8” (187 mm) W x 2-3/8” (60 mm) H x 9/16” (14 mm) D

FINISHES

ALM	Aluminum anodized (standard)
DBZ	Dark bronze anodized
BLK	Black anodized

NOTES

Local Approval:	All installations must be approved by the Authority Having Jurisdiction (AHJ)

LOCKING DEVICES - 2941 MAGNETIC LOCK

WARRANTY One-year warranty

MODELS
2941 — 600 lbs. holding force (272 kg)

APPLICATION For interior door traffic control where physical attack is not a concern

FEATURES
Components:

- Designed for system integrators, distributors, installers, and building owners presently using low cost import or private label brand access control hardware
- Interlocking quick mount assembly
- Provides superior, less obtrusive appearance compared to stainless steel epoxy sealed magnetic locks
- Full monitoring is standard
- Door status, lock status and bi-color LED included
- Adjustable mounting bracket with choice of self-drilling and tapping mounting screws or machine screws
- Wire access chamber with terminal block
- Printed circuit board with voltage and current spike protection
- Instant release anti-residual magnetism circuit

Certification: ANSI/BHMA A156.23 Grade 1, Compliant

ELECTRICAL SPECIFICATIONS
Input:
Current/Voltage: 500mA/250mA @ 12/24VDC (field selectable)

MONITORING
Lock Status: SPDT, Dry 2mA @ 30VDC

Door Status: SPDT, Dry 500mA @ 30VDC

ACCESSORIES

2-679-0101	Top Jamb Kit
2-679-0103	Glass Armature Mounting Kit
2-679-0106	Angle Bracket (cut to fit 2941)
2-679-0107	Stop Filler Plate (field cut for 2941)
2-679-0108	Stop Filler Plate (field cut for 2941)

MECHANICAL SPECIFICATIONS
Lock Dimensions: 9-7/8" (251 mm) W x 2" (51 mm) H x 1" (25 mm) D

Armature Dimensions: 7-5/16" (186 mm) W x 1-1/2" (38 mm) H x 1/2" (13 mm) D

FINISHES Aluminum anodized

HAGER COMPANIES

LOCKING DEVICES - 2942 MAGNETIC LOCK

MODELS
2942 — 1200 lbs. holding force (545 kg)

WARRANTY — One-year warranty

APPLICATION — For perimeter and interior door security and access control

FEATURES

Components:

- Designed for system integrators, distributors, installers, and building owners presently using low cost import or private label brand access control hardware
- Interlocking quick mount assembly
- Provides superior, less obtrusive appearance compared to stainless steel epoxy sealed magnetic locks
- Full monitoring is standard
- Door status, lock status and bi-color LED included
- Adjustable mounting bracket with choice of self-drilling and tapping mounting screws or machine screws
- Wire access chamber with terminal block
- Printed circuit board with voltage and current spike protection
- Instant release anti-residual magnetism circuit

Certification: ANSI/BHMA A156.23 Grade 1, Compliant

ELECTRICAL SPECIFICATIONS

Input:
Current/Voltage: 500mA/250mA @ 12/24VDC (field selectable)

MONITORING
Lock Status: SPDT, Dry 2mA @ 30VDC

Door Status: SPDT, Dry 500mA @ 30VDC

ACCESSORIES

2-679-0100	Top Jamb Kit
2-679-0102	Glass Armature Mounting Kit
2-679-0106	Angle Bracket
2-679-0107	Stop Filler Plate
2-679-0108	Stop Filler Plate

MECHANICAL SPECIFICATIONS

Lock Dimensions: 10-1/2" (267 mm) W x 2-7/8" (73 mm) H x 1-5/8" (41 mm) D

Armature Dimensions: 7-5/16" (186 mm) W x 2-3/8" (60 mm) H x 1/2" (13 mm) D

FINISHES — Aluminum anodized

LOCKING DEVICES - 2941 AND 2942 ACCESSORIES

TOP JAMB MOUNTING KITS FOR INSWING DOORS

2-679-0100
Top jamb kit for use with 2942

2-679-0101
Top jamb kit for use with 2941

GLASS DOOR ARMATURE MOUNTING KITS

2-679-0102
Glass door kit for use with 2942

2-679-0103
Glass door kit for use with 2941

ANGLE BRACKETS

Used for the extension of a narrow frame header mounting surface, the bracket provides additional surface area for proper lock mounting.

2-679-0106
Angle bracket for use with 2942
cut for use with 2941
10-1/2" (l) x 1-1/2" (h) x 3/4" (d)
[266 (l) x 12 (h) x 19 (d) mm]

TOP FILLER PLATES
Used where the frame stop does not provide enough mounting surface area for proper lock mounting.

2-679-0107
Stop filler plate for use with 2942
Cut for use with 2941
1/2" (h) x 10-1/2" (l) x 3/4" (d)
[12 (h) x 266 (l) x 19 (d) mm]

2-679-0108
Stop filler plate for use with 2942
Cut for use with 2941
3/4" (h) x 10-1/2" (l) x 3/4" (d)
[19 (h) x 266 (l) x 19 (d) mm]

HAGER COMPANIES

LOCKING DEVICES - 2950 MAGNETIC LOCK

MODELS

2951	Single magnetic lock with 1650 lbs. holding force (748 kg)
2952	Double magnetic lock with 1650 lbs. holding force (748 kg)
2953	Single magnetic lock with 1200 lbs. holding force (545 kg)
2954	Double magnetic lock with 1200 lbs. holding force (545 kg)

WARRANTY Lifetime warranty

APPLICATION For perimeter and interior door security and access control

FEATURES

Components:

- Modular design
- Modular upgrade kits
- Field upgradeable without removal
- Uniform design and installation
- Identical housing, template, and accessories
- Quick mount assembly
- Compatible with any access control system
- Secure wiring and mounting screws with interlocking mounting plate

Certification: ANSI/BHMA A156.23 Grade 1 Compliant

OPTIONS

Time	Built-in field adjustments 0-30 seconds re-lock delay
DPS	Door Position Switch indicates door open and door closed
ATS	Anti Tamper Switch indicates access cover removal
MBS	Magnetic Board Sensor indicates locked and unlocked, low holding power, tampering and obstruction between armature and magnetic core

ELECTRICAL SPECIFICATIONS

Input:

Current/Voltage:

2951	Auto Sensing 670mA/350mA @ 12/24 VDC
2952	Auto Sensing 1.34A /700mA @ 12/24VDC
2953	Auto Sensing 250mA/125mA @ 12/24VDC
2954	Auto Sensing 500mA/250mA @ 12/24VDC

MONITORING

Time	SPDT, Dry 20mA @ 30VDC
DPS	SPDT, Dry 20mA @ 30VDC
ATS	SPDT, Dry 20mA @ 30VDC
MBS	SPDT, Dry 20mA @ 30VDC

ACCESSORIES

2-679-0109	Timer Input Module
2-679-0110	Door Position Sensor
2-679-0111	Magnetic Bond Sensor
2-679-0112	Anti-Tamper Switch

MOUNTING KITS

- Top Jamb Kit
- Glass Door Kit
- Universal Header Bracket
- Spacer Bracket
- Armature Mounting Plate with and without Sensor Door Coordinator Lock Mounting Kit
- Filler Plates
- Angle Brackets
- See Mounting Kits Reference File for complete list of all mounting kits and part number

MECHANICAL SPECIFICATIONS

2951 & 2953 Dimensions:	11" (279 mm) W x 2-3/4" (70 mm) H x 1-9/16" (40 mm) D
2952 & 2954 Dimensions:	22" (559 mm) W x 2-3/4" (70 mm) H x 1-9/16" (40 mm) D

FINISHES

ALM	Aluminum anodized (standard)
DBZ	Dark bronze anodized

LOCKING DEVICES - 2950 SERIES ACCESSORIES

MODULAR KITS

2-679-0109
Timer Input Module
Built-in field adjustable 0-30 seconds re-lock delay

2-679-0110
Door Position Sensor
Indicates door open and door closed

2-679-0111
Magnetic Bond Sensor
Indicates locked and unlocked, low holding power, tampering and obstruction between armature and magnetic core

2-679-0112
Anti-Tamper Switch
Indicates access cover removal.

TOP JAMB MOUNTING KITS FOR INSWING DOORS

2-679-0120
Top jamb kit for use with 2951 and 2953
ALM

2-679-0130
Top jamb kit for use with 2952 and 2954
ALM

GLASS DOOR ARMATURE MOUNTING KITS

2-679-0160
Glass door kit for use with 2951 and 2953
ALM

Note: For 2952 and 2954, order two (2) glass door armature mounting kits.

UNIVERSAL HEADER BRACKET

Used in lieu of angle brackets, a universal header bracket provides a faster mounting solution, saving time and labor costs. Reduce potential for missized and misaligned mounting holes, broken taps, removal of broken taps. Combined with interlocking easy mount assembly, save up to a half day's labor with the installation of 12 locks.

- Solid 1" (25 mm) bar provides higher security and superior aesthetics
- Machined wire chase provides concealed and secure wiring
- Multiple pre-drilled and tapped mounting holes to accommodate the use of several different locks on either 4" (102 mm) or 4-1/2" (114 mm) aluminum frames

2-679-0180
For use with 2951 and 2953
1 x 1 x 11 in (25 x 25 x 279 mm)
ALM

2-679-0190
For use with 2952 and 2954
1 x 1 x 22 in (25 x 25 x 559 mm)
ALM

2-679-0191
For use with 2952 and 2954
1 x 1 x 22 in (25 x 25 x 559 mm)
DBZ

SPACER BRACKETS

Aluminum frames with blade stop - lowers magnetic lock below blade stop. Concrete filled hollow metal frames - provides multiple points for concealed wire entry.

- Pre-drilled and tapped specifically for 2951 and 2952 magnetic locks
- Machined wire chase provides multiple points for concealed wire entry from concrete filled frames
- ALM (aluminum) finish

2-679-0200
Bracket for 2951 and 2953
1/2 x 1-1/2 x 11 in (13 x 38 x 279 mm)

2-679-0201
Bracket for 2952 and 2954
1/2 x 1-1/2 x 22 in (13 x 38 x 559 mm)

ARMATURE MOUNTING PLATE

Armature mounting plates provide a solution for mounting magnetic locks to the top rail of aluminum, glass, wood, and hollow metal doors that do not permit the use of thru bolts.

2-679-0204
Armature mounting plate

2-679-0205
Armature mounting plate with sensor

Note: For 2952 and 2954, order two (2) armature mounting plates.

FILLER PLATES

Filler plates are for extension of the stop to provide a proper mounting surface on the underside of the header. Available in Aluminum (ALM) or Dark Bronze (DBZ) finish. Contact Hager Tech Support for part numbers for additional finishes (including BRZ, BLK, US3, US4, US26, and US26D).

For 11" (279 mm) Single Magnetic Lock Models (2951/2953)

2-679-0281
ALM
1/8 x 1-1/4 in (3 x 32 mm)

2-679-0283
DBZ
1/8 x 1-1/4 in (3 x 32 mm)

2-679-0291
ALM
1/4 x 1-1/4 in (6 x 32 mm)

2-679-0293
DBZ
1/4 x 1-1/4 in (6 x 32 mm)

2-679-0311
ALM
1/2 x 1-1/4 in (13 x 32 mm)

2-679-0313
DBZ
1/2 x 1-1/4 in (13 x 32 mm)

2-679-0321
ALM
5/8 x 1-1/4 in (16 x 32 mm)

2-679-0323
DBZ
5/8 x 1-1/4 in (16 x 32 mm)

For 22" (559 mm) Double Magnetic Lock Models (2952/2954)

2-679-0381
ALM
1/8 x 1-1/4 in (3 x 32 mm)

2-679-0383
DBZ
1/8 x 1-1/4 in (3 x 32 mm)

2-679-0391
ALM
1/4 x 1-1/4 in (6 x 32 mm)

2-679-0393
DBZ
1/4 x 1-1/4 in (6 x 32 mm)

2-679-0411
ALM
1/2 x 1-1/4 in (13 x 32 mm)

2-679-0413
DBZ
1/2 x 1-1/4 in (13 x 32 mm)

2-679-0421
ALM
5/8 x 1-1/4 in (16 x 32 mm)

2-679-0423
DBZ
5/8 x 1-1/4 in (16 x 32 mm)

LOCKING DEVICES - 2950 SERIES ACCESSORIES

ANGLE BRACKETS

Angle brackets are used as extensions on shallow door frames to provide adequate mounting surface. Available in Aluminum (ALM) or Dark Bronze (DBZ) finish. Contact Hager Tech Support for part numbers for additional finishes (including BRZ, BLK, US3, US4, US26, and US26D).

For 11" (279 mm) Single Magnetic Lock Models (2951/2953)

2-679-0491
ALM
1-1/2 x 1-1/2 in (38 x 38 mm)

2-679-0493
DBZ
1-1/2 x 1-1/2 in (38 x 38 mm)

2-679-0501
ALM
2 x 1-1/2 in (51 x 38 mm)

2-679-0503
DBZ
2 x 1-1/2 in (51 x 38 mm)

For 22" (mm) Double Magnetic Lock Models (2952/2954)

2-679-0571
ALM
1-1/2 x 1-1/2 in (38 x 38 mm)

2-679-0573
DBZ
1-1/2 x 1-1/2 in (38 x 38 mm)

2-679-0581
ALM
2 x 1-1/2 in (51 x 38 mm)

2-679-0583
DBZ
2 x 1-1/2 in (51 x 38 mm)

DOOR COORDINATOR LOCK MOUNTING KITS

2-679-0210
Door coordinator lock mounting kit for use with 2951 and 2953
ALM

2-679-0220
Door coordinator lock mounting kit for use with 2952 and 2954
DBZ

HAGER COMPANIES

LOCKING DEVICES - 2961 SERIES MAGNETIC SHEAR LOCK

MODELS
2961 — Single magnetic shear lock with 2000 lbs. holding force (907 kg)

WARRANTY — One-year warranty

APPLICATION — For commercial grade hollow metal and wood doors and frames and Herculite doors with top rails

FEATURES
- Concealed, high security, Fail Safe locking mechanism
- Incorporates floating armature assembly and special alloy steel locking tabs on both lock and armature assemblies
- May be adjusted both vertically and laterally to compensate for wide door gaps and warped or misaligned doors

Components:
- 2,000 lbs (907 kg) holding force without current inrush or high operating temperature
- 8" x 1-1/2" (203 mm x 38 mm) lock
- Integrated electronics
- 1-5/8" (41 mm) depth for 1-3/4" - 2" (44 mm - 51 mm) frames
- Armature supplied with lock (specify type required - ITC, FTC, or HTC)
- Door static sensor ensures door is at rest and aligned, before the magnet is permitted to energize (eliminates the potential for lock misalignment)
- Lateral adjustment of shear tabs to compensate for warped or misaligned doors, permitting accurate locking
- Vertical adjustment of both the armature and the adjustable delay relock sensor compensates for wide door gaps
- Unique floating action for easy armature lift when the magnet is energized and provides ability to overcome wide door gaps
- Alloy shear tabs ensure continued high holding force
- No profiling of the soft armature steel that may be prone to wear and reduced holding force
- Advanced electronic circuitry that incorporates door static, positioning and timed relock sensor and automatic voltage sensing for 12/24 VDC input
- Noise dampeners reduce the noise associated with locking and unlocking

OPTIONS

MBS
- Bond sensor indicates proper armature contact or reduced holding power due to improper armature contact or tampering
- SPDT 0.25 amp

DPS
- Door position switch indicates door open or closed
- SPDT 0.25 amp maximum

HTR — Herculite top rail armature adjustment bracket for leading edge adjustments

ELECTRICAL SPECIFICATIONS

Input:
Voltage: Auto Sensing 650/350 mA @ 12/24 VDC

MONITORING
DPS: SPDT, Dry 20mA @ 30VDC
MBS: SPDT, Dry 20mA @ 30VDC

ACCESSORIES
2-679-0600 — Wood door reinforcement box (sold separately)

ARMATURES
ITC Armature — Standard mounting armature kit for aluminum and hollow metal doors with 7/8" to 1-1/8" deep top channels, wood doors, and factory prepared hollow metal flush edge doors

FTC Armature — Mounting kit for field prepared horizontal mounting in hollow metal doors with flush edge

HTC Armature — Mounting kit for 1-15/16" deep Herculite channels

MECHANICAL SPECIFICATIONS

Lock Dimensions: 8" (203 mm) W x 1-1/2" (38 mm) H x 1-5/8" (41 mm) D

Armature Dimensions: 8" (203 mm) W x 1-1/2" (38 mm) H x 7/8" (48 mm) D

FINISHES
ALM — Aluminum anodized (standard)

LOCKING DEVICES - 2965 MAGNETIC SHEAR LOCK

MODELS
2965 — Single magnetic shear lock with 2700 lbs. holding force (1225 kg)

WARRANTY — One-year warranty

APPLICATION — For commercial grade hollow metal and wood doors and frames and Herculite doors with top rails

FEATURES
- Concealed, high security, Fail Safe locking mechanism
- Incorporates floating armature assembly and special alloy steel locking tabs on both lock and armature assemblies
- May be adjusted both vertically and laterally to compensate for wide door gaps and warped or misaligned doors

Components:
- 2,700 lbs (1225 kg) holding force without current inrush or high operating temperature
- 10-7/16" x 1-1/2" (265 mm x 38 mm) lock
- Integrated electronics
- 1-5/8" (41 mm) depth for 1-3/4" - 2" (44 mm - 51 mm) frames
- Armature supplied with lock (specify type required - ITC, FTC, or HTC)
- Door static sensor ensures door is at rest and aligned, before the magnet is permitted to energize (eliminates the potential for lock misalignment)
- Lateral adjustment of shear tabs to compensate for warped or misaligned doors, permitting accurate locking
- Vertical adjustment of both the armature and the adjustable delay relock sensor compensates for wide door gaps
- Unique floating action for easy armature lift when the magnet is energized and provides ability to overcome wide door gaps
- Alloy shear tabs ensure continued high holding force
- No profiling of the soft armature steel that may be prone to wear and reduced holding force
- Advanced electronic circuitry that incorporates door static, positioning and timed relock sensor and automatic voltage sensing for 12/24 VDC input
- Noise dampeners reduce the noise associated with locking and unlocking

OPTIONS

MBS
- Bond sensor indicates proper armature contact or reduced holding power due to improper armature contact or tampering
- SPDT 0.25 amp

DPS
- Door position switch indicates door open or closed
- SPDT 0.25 amp maximum

HTR — Herculite top rail armature adjustment bracket for leading edge adjustments

ELECTRICAL SPECIFICATIONS

Input:
Voltage: Auto Sensing 800/400 mA @ 12/24 VDC

MONITORING
MBS: SPDT, Dry 250mA @ 30VDC
DPS: SPDT, Dry 250mA @ 30VDC

ACCESSORIES
2-679-0601 — Wood door reinforcement box (sold separately)

ARMATURES
ITC Armature — Standard mounting armature kit for aluminum and hollow metal doors with 7/8" to 1-1/8" deep top channels, wood doors, and factory prepared hollow metal flush edge doors

FTC Armature — Mounting kit for field prepared horizontal mounting in hollow metal doors with flush edge

HTC Armature — Mounting kit for 1-15/16" deep Herculite channels

MECHANICAL SPECIFICATIONS

Lock Dimensions: 10-7/16" (265 mm) W x 1-1/2" (38 mm) H x 1-5/8" (41 mm) D

Armature Dimensions: 11" (279 mm) W x 1-1/2" (38 mm) H x 7/8" (48 mm) D

FINISHES
ALM — Aluminum anodized (standard)

Access Controls

As the demand for access controls continue to grow, Hager Companies offers proven, reliable, and innovative solutions. While access control keypad devices are fairly definitive, customer requirements and building codes can vary. Hager Companies keypad product line offers solutions for these differing demands and requirements.

Key switches are ideal for a range of electrified openings such as an auditorium or gate operation that you might find near a hotel pool. With many different types of applications, key switches are an economical and viable devices in many installations.

Hager's line of heavy duty keypads has an array of ideal installations. The 2915 is perfect for secure areas such as a records archive room or server room. The 2916 and 2916P are ideal for outdoor installations such as college dormitories, apartment buildings, remote buildings, and office buildings.

Hager Companies provides proven and reliable products for the ever growing access control market. For more information, please visit the Hager Companies website at www.hagerco.com

ACCESS CONTROLS - 29KS KEY SWITCH

MODELS
29KS — Key switch

WARRANTY — One-year warranty

APPLICATION
- Access control
- Automatic gate operation
- Alarm shunt
- Alarm reset
- Machine operation

FEATURES
- Provides an economical method of providing authorized control for a variety of applications
- Choice of several contact configurations ensures compatibility with virtually any system
- Compatible with U.S. standard 1.125” and 1.25” mortise key cylinders and interchangeable core cylinders (not included)
- Compatibility with a new or existing facility mechanical key system is maintained
- Standard switch assemblies are single gang box mounted

Components:
- Single gang, wall mounted, recessed key cylinder
- Tamper resistant, recessed cylinder
- Tamper resistant spanner screws
- Heavy duty all steel assembly
- 20 gauge stainless steel faceplate
- Large actuator for positive and consistent activation
- Compatible with 1.125” or 1.25” mortise cylinder (non included)

Functions:

ASD	Alternate Action (on/off) SPDT
MSD	Momentary SPDT
ADD	Alternate Action (on/off) DPDT
MDD	Momentary DPDT

ELECTRICAL SPECIFICATIONS

Voltage:
- 6 amp @ 30 VDC
- 7”, 22 gauge wire leads

OPTIONS

LEDG	One (1) green LED
LEDR	One (1) red LED
2LED	One (1) green and one (1) red LED

CYLINDER

3902	1-1/8” recommended (order separately)
3978	Cam required (order separately)

MECHANICAL SPECIFICATIONS

Dimensions: 2-7/8” (73 mm) W x 4-1/2” (114 mm) H x 20 Gauge (0.912 mm)

FINISHES — US32D

NOTES
- Single switch assembly requires cloverleaf cam
- Dual switch assembly requires standard cam

ACCESS CONTROLS - 2915 HEAVY DUTY KEYPAD

MODELS
2915 — Heavy Duty Keypad

WARRANTY
One-year warranty

APPLICATION
- Single gang indoor keypad
- Designed to control access of a single entry point for facilities with up to 500 users
- Each user assigned a personal identification number (PIN)

FEATURES
Components:
- Blue backlit, moisture-resistant keypad
- 3/32" (2 mm) thick stainless steel faceplate
- 1/4" (6 mm) wall extrusion depth
- 500 users, 4-6 digit PIN codes
- 4 outputs, 2 relay and 2 solid status outputs timed or latching (on/off)
- Assign entry PINs to relays 1 and/or 2
- LED status: access, lockout
- Tactile audible key press, select volume
- Timed anti-passback
- Keypad tamper lockout
- Code activated timed entry PIN disable
- Request-to-exit/Enter input, egress keypad input
- Choice of door sense/relay inhibit input functions (forced entry, door ajar, inhibit relay 1 or 2, auto relock when door closes)
- Choice of 2 solid status output functions (alarm shunt, forced entry, door ajar, tamper lockout, keypad active)

ELECTRICAL SPECIFICATIONS

Inputs:

Voltage:	Auto Sensing 12 to 24 VAC/DC
Current:	30mA typical, 150 mA maximum
Operating Temperature:	-20° to 130°F (-30° to 54°C)
Operating Humidity:	5 - 95% (non-condensing)

OUTPUTS

Relay 1	Form "C", 5 amps @ 28VDC
Relay 2	• Form "C", 2 amps @ 28VDC • Switch to common outputs 3 & 4, 100 mA @ 30VDC

MECHANICAL SPECIFICATIONS

Dimensions:	3" (76 mm) W x 4-3/4" (121 mm) H x 1-1/2" (38 mm) D
FINISHES	US3, US4, US10B, US26, US32D

HAGER COMPANIES

ACCESS CONTROLS

MODELS
2916 Heavy Duty Keypad
2916P Heavy Duty Keypad

WARRANTY One-year warranty

APPLICATION
- Surface mount indoor/outdoor keypad
- Designed to control access of a single entry point for facilities with up to 500 users
- Each user assigned a personal identification number (PIN)

FEATURES
Components:
- Heavy cast vandal resistant housing
- Heavy cast metal blue backlit keys
- 500 users, 4-6 digit PIN codes
- 4 outputs, 2 relay and 2 solid status outputs timed or latching (on/off)
- Assign entry PINs to relays 1 and/or 2
- LED status: access, lockout
- Tactile audible key press, select volume
- Timed anti-passback
- Keypad tamper lockout
- Code activated timed entry PIN disable
- Request-to-exit/Enter input, egress keypad input
- Choice of door sense/relay inhibit input functions (forced entry, door ajar, inhibit relay 1 or 2, auto relock when door closes)

ELECTRICAL SPECIFICATIONS
Inputs:

Voltage:	Auto Sensing 12 to 24VAC/DC
Current:	30mA typical, 150mA maximum
Operating Temperature:	-20° to 130°F (-30° to 54°C)
Operating Humidity:	5 - 95% (non-condensing)

OUTPUTS

Relay 1	Form "C", 5 amps @ 28VDC
Relay 2	Form "C", 2 amps @ 28VDC
	Switch to common outputs 3 & 4, 100mA @ 30VDC

MECHANICAL SPECIFICATIONS
Dimensions: 3" (76 mm) W x 5-3/4" (146 mm) H x 1-7/16" (37 mm) D

ACCESSORIES
2-679-0669 Protective Shroud

FINISHES US32D

ACCESS CONTROLS - 2-679-0708 UNDER DESK PUSH SWITCH

MODELS
2-679-0708 | Under Desk Switch

WARRANTY | One-year warranty

APPLICATION | Enables the remote control of doors equipped with electric locks and access controls

FEATURES
Components: | Mounts to the underside of a desk for remote door control

ELECTRICAL SPECIFICATIONS
| Momentary push switch

MECHANICAL SPECIFICATIONS
Dimensions: | 1” (25 mm) W x 2-1/4” (57 mm) H x 2-1/2” (63 mm) D

ACCESS CONTROLS - DOOR PROP ALARM

29EA
Door Prop Alarm
Key Switches

DESCRIPTION

- Provides audible alarm when a door is accessed or left open
- Installs in single gang or double gang enclosures
- Compatible with U.S. standard 1.125" and 1.25" mortise key cylinders and interchangeable core cylinders (Sold Separately)

FUNCTIONS

- N - No Key Switch
- M - Mortise Cylinder Switch (Sold Separately)
- K - Key Switch

FEATURES

- Audible sirens with adjustable timer settings
- Bypass status indicator light
- Vandal-resistant aluminum construction with security screws
- Optional key switch or mortise cylinder
- Adjustable Timed Delay
- Exit Alarm on Door Opening
- Automatic or Manual Alarm Reset
- Output Relays
- Integral Bi-color LED Status Indicator
- Compact Universal Mounting
- 85dB Piezo Buzzer Alarm

ELECTRICAL SPECIFICATIONS

Inputs:

Voltage:	12 or 24 VDC
Trigger Input:	Dry, N/O or N/C (Selectable by on board jumper), Door Contact (Sold Separately)
Remote Reset/ Bypass Input:	Dry, N/O or N/C. Reset by momentarily shorting the input when alarmed. Bypass by shorting & holding the input when secure.

OUTPUTS

Alarm Output:	Form C, 2A @ 30VDC max
Auxiliary Output:	Form C, 2A @ 30VDC max. Follows Door Contact input, or Alarm output (fieldselectable)
LED Indicators:	Green - Normal Operation Red - Alarm Activated

CYLINDER

3902 - 1-1/8" recommended (order separately)
HS4 - HG02 GEO Mortise Cylinder

Egress Devices

Just as important as access controls are egress controls. With fail secure openings, egress controls send a signal to unlock the locking device. With low energy automatic operators, knowing acts are needed to send signals to the power operator. These are all essential functions to an electrified opening. Hager Companies provides a wide range of egress controls that will satisfy your customers while being easy to install.

EGRESS DEVICES - 2972 EXIT SWITCH

MODELS

2972-M	Momentary SPDT Exit Switch
2972-T	Integrated electric timer (adjustable 1-60 seconds) exit switch

WARRANTY One-year warranty

APPLICATION

- 2" (50 mm) illuminated switch button for easy activation
- High impact resistant material stands up to abuse
- "Push to Exit" sign complies with NFPA requirements
- Blue illuminate button designed for access and egress applications for the disabled

OPTIONS

LEDG	One (1) green LED
LEDR	One (1) red LED
2LED	One (1) green and one (1) red LED
BLU	Disabled access button

ELECTRICAL SPECIFICATIONS

2972M	SPDT, 5A @ 30 VDC
2972T	SPDT, 2A @ 12/24VDC
Wire Leads	6" (152 mm) - 20 gauge

MECHANICAL SPECIFICATIONS

	1 Gang
Dimensions:	2-7/8" (73 mm) W x 4-1/2" (114 mm) H

FINISHES US32D

EGRESS DEVICES - 2973 CODE COMPLIANT EXIT SWITCH

MODELS	
2973	Code Compliant Exit Switch with integrated timer (fixed 30 seconds)
WARRANTY	One-year warranty
APPLICATION	• Code compliant manual releasing devices and sensors • Switch and sensor used together comply with manual releasing device and sensor device requirements for access controlled egress doors
Certification:	• 2006 IBC 1008.1.3.4 • 2012 IBC 1008.1.9.8 • NFPA 7.2.1.6.2 • IFC 1008.1.3.4 • California Fire Code

OPTIONS	
LEDG	One (1) green LED
LEDR	One (1) red LED
2LED	One (1) green and one (1) red LED

ELECTRICAL SPECIFICATIONS	
Output:	SPDT, 5A @ 30 VDC
Wire Leads	6” (152 mm) - 20 gauge

MECHANICAL SPECIFICATIONS	
	1 Gang
Dimensions:	2-7/8” (73 mm) W x 4-1/2” (114 mm) H
FINISHES	US32D

EGRESS DEVICES - PIR EGRESS SENSOR

MODELS

2-679-0611	White PIR egress sensor
2-679-0612	Black PIR egress sensor

WARRANTY | One-year warranty

APPLICATION

- Access control system unit
- Unlocks doors automatically when persons approaching door are detected
- Compiles with national fire and building code requirements for access controlled egress doors
- Code compliant Fail Safe mode releases locks when power to PIR sensor is interrupted

Certification: | UL Listed 294

ELECTRICAL SPECIFICATIONS

Input:	12 or 24 VAC/DC @ 26 mA max
Output:	2 SPDT dry, 2 amp @ 30VDC
Operating Temperature:	-20° to 120°F (-30° to 49°C)

MECHANICAL SPECIFICATIONS

Dimensions: | 1-1/2" (38 mm) W x 6-1/4" (159 mm) H x 1-1/2 (38 mm) D

EGRESS DEVICES - 2977 PIEZOELECTRIC EXIT SWITCH

MODELS
2977 — Stainless Steel Piezoelectric Request-to-Exit Switch

WARRANTY — One-year warranty

APPLICATION
- Designed for indoor, outdoor, commercial, and industrial egress applications
- Ideal for harsh or high traffic conditions

FEATURES
Components:
- Vandal and weather resistant
  - 3/32" (2 mm) stainless steel vandal resistant faceplate
- No moving parts
- Selectable bi-color illumination status (Relay OFF - red or green)
  (Relay ON - red or green)
- Adjustable timer output, 1-30 seconds
- Superior performance in virtually any environment
- Can be used to control an automatic door, electromechanical lock, strike, or magnetic lock
- May be tied into the remote bypass (request-to-exit) input of an access control system
- Can be used to shunt an alarm system to allow egress from a secure area

ELECTRICAL SPECIFICATIONS

Input:	12/24 AC/DC
Current:	Idle - 30 mA Active - 150 mA
Output:	SPDT dry contact, 3 amp @ 30 VDC
Operating Temperature:	-40° to 160°F (-40° to 71°C)
Relay:	• 100,000 cycles @ 3 A 30 VDC life expectancy • 200,000 cycles @ 1.5 A 30 VDC life expectancy

MECHANICAL SPECIFICATIONS

Button Switch:	1 billion cycle life expectancy
Dimensions:	3" (76 mm) W x 4-3/4" (121 mm) H

FINISHES — US32D

EGRESS DEVICES - 2978 TOUCHLESS EXIT SWITCH

MODELS
2978 — Touchless Exit Switch

WARRANTY — One-year warranty

APPLICATION
- Designed to control eletric locks/strikes, magnetic locks, or automatic door operators
- No touch wave-to-exit switch
- Active with wave of the hand
- For sanitary entry/exit applications

FEATURES
Components:
- Bi-color status illumination
- Quick connect screwless terminal block for easy installation
- No moving parts
- Uses infrared sensor technology

ELECTRICAL SPECIFICATIONS

Current:	• 30 mA standby; 70 mA Active @ 12 VDC • 15 mA standby; 35 mA Active @ 24 VDC
Output:	DPDT, 3 amp dry contact
Activation Time:	1 second or as long as sensor is triggered
LED Color:	Standby - red; Active - green
Range:	4” (10 cm)

MECHANICAL SPECIFICATIONS

Dimensions:	2-3/4” (70 mm) W x 4-1/2” (114 mm) H
FINISHES	US32D

EGRESS DEVICES - 4801 NON-LATCHING PRESSURE SENSE PUSH BAR

MODELS
4801

The Sure Exit is a non-latching, heavy duty, request-to-exit push bar that will activate the 2958 & 2958T when slight pressure is applied to the bar.

WARRANTY
One-year warranty

FEATURES
Components:

- Magnetic lock release
- Access control request-to-exit
- Delayed egress trigger
- Alarm shunt
- CCTV or alarm activation
- Tri-Failsafe
  - *a third redundant micro switch is automatically activated to release the door if both sensors or electronics fail*
- No moving parts, quick, and quiet operation
- Human touch not required
- Sensor calibration not required
- Field installed green sign with 1" letters
- Heavy duty construction
- Narrow, low profile
- Two outputs
  - *two dry contacts for lock release, request-to-exit, alarm shunt, alarm activation, CCTV activation*
- Armored power loop
  - *18" flex stainless conduit*

ELECTRICAL SPECIFICATIONS

Voltage Input:	12/24 VDC ±10% - *no field adjustment*
Current Input:	20 mA @ rest, 115 mA active
Output:	Two, SPDT Dry, 3 Amp @ 28 VDC
Operating Temperature:	0° to 150° F (-18° to 66° C)

MECHANICAL SPECIFICATIONS

Activation Force:	• 5 lbs. (2.2 kg) • Field adjustable up to 15 lbs. (6.8 kg)
Dimensions:	2-3/8" (60 mm) W x 36" (914 mm) H x 1-7/8" (48 mm) D

OPTIONS

- 42" (1,067 mm) wide doors
- 48" (1,219 mm) wide doors

FINISHES

ALM	Aluminum anodized
BLK	Black anodized

NOTES
Length: Bars may be field cut

EGRESS DEVICES - 2-679-0650 EMERGENCY DOOR RELEASE

MODELS
2-679-0650 — Break glass emergency door release 3V-28 VDC, 18 mA with siren (blue)

WARRANTY — One-year warranty

APPLICATION
- Breakable glass emergency door release with siren
- Ideal for immediate unlocking of doors that are equipped with fail safe electric locks and may influence approval of an electronic lock system
- Built-in alarm may be used as a local door annunciator

FEATURES
Components:
- Remote monitoring
- CCTV activation or alarm activation
- Single gang box mounted
- Two replacement glass plates included

ELECTRICAL SPECIFICATIONS
Output: DPDT dry contact, 10 amp @ 28VDC

MECHANICAL SPECIFICATIONS
Dimensions: 5-1/2" (140 mm) W x 3-1/2" (90 mm) H x 1-3/8" (35 mm) D

Electric Power Transfer Devices

Electrified cylindrical locks, mortise locks, and exit devices all require power provided to them. The most effective way to do this is to run power through the middle of the door. With Hager, you can select the hinge type that you need and that your customer wants and know that all of those products can be electrified. Stay with the proven name in hinges – Hager. Since 1849, Hager has been manufacturing hinges in the U.S. and as we continue to build on our rich history, we will continue to bring our customers reliability, value, and peace of mind. Whether you need electrified conventional hinges, electrified geared Roton hinges, concealed power transfers or a transfer loop, knowing that you chose Hager as your preferred hinge brand will prove to be a wise decision.

ELECTRIC POWER TRANSFER DEVICES - HEAVY DUTY

2-679-0620
Concealed Mortise Mount Power Transfer Loop

- Frame mortised steel dust box with flexible steel loop and chrome finish
- Recommended for use with hollow metal frames
- UL Listed
- 11-1/2 (h) x 1 (w) x 3/4 in (d)
  (292 (h) x 25 (w) x 19 (d) mm)

- Provides a concealed and secure means of transferring electric lock and exit device power and signal wires from the frame to the door
- Completely concealed when the door is closed
- Ideal for heavy traffic and applications requiring higher security to inhibit tampering and abuse

MODELS

2 conductor
Two (2) 18 ga. wires, 5 amp @ 12/24 V AC/DC

2-679-0621
Aluminum powder coat (US28 equivalent)

2-679-0622
Dark brown powder coat (US10B equivalent)

10 conductor
Ten (10) 24 ga. wires, 1 amp @ 12/24 V AC/DC

2-679-0623
Aluminum powder coat (US28 equivalent)

2-679-0624
Dark brown powder coat (US10B equivalent)

FEATURES
- Power control, input for electric locks and exit devices, locked, latched, mantrap, forced entry, open status signal wiring
- Mortise door and frame installation
- PTM is completely concealed when the door is closed
- All metal design with stainless steel tubular wire transfer and heavy cast housing with steel back boxes provide weather and tamper resistance when door is open or closed
- Fasteners for wood, steel, and aluminum doors and frames included
- UL Listed Miscellaneous Fire Door Accessories
- UL 10C Listed for up to 3-hours on fire-rated doors and frames
- Classified according to Uniform Building Code (UBC) Standard 7-2, Fire Test of Door Assemblies (1997)

COMPATIBLE OPENINGS
- 1-3/4" (44 mm) thick doors
- 0-180° opening swing with up to 3/4" (19 mm) offset pivots
- 0-180° opening swing with up to 5" wide butt hinges
- 0-130° opening swing with up to 5-1/2" (140 mm) wide butt hinges
- 0-130° opening swing with up to 6" (152 mm) wide butt hinges
- Not compatible with center hung doors, swing clear hinges, pocket pivots, butt hinges larger than 6" (152 mm), and 1-1/2" (38 mm) offset pivots

DIMENSIONS
9" (h) x 1-1/4" (w) x 1-5/8" (d)
229 mm (h) x 32 mm (w) x 41 mm (d)

Door Position Sensors

Monitoring the position of the door is crucial security. Hager Companies offers a mortise style door position sensor for new installations. We also offer a drill-in style to make retrofitting an opening quick and easy.

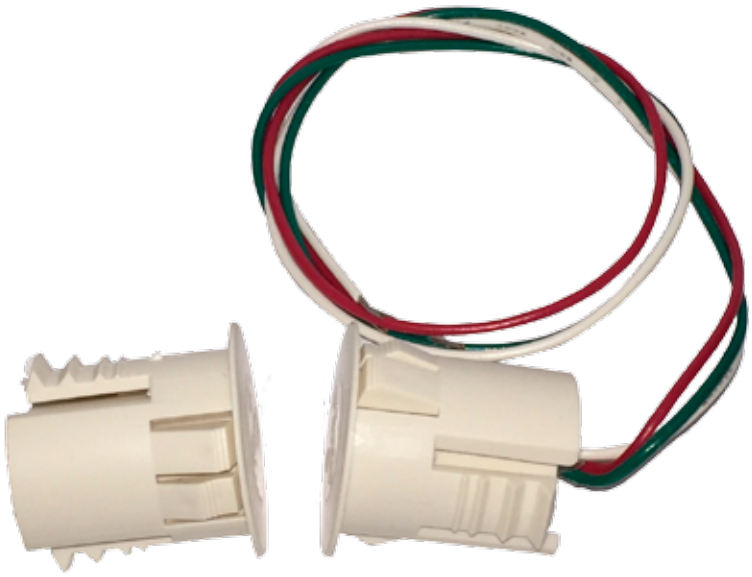

DOOR POSITION SENSORS

MODELS
2-679-0625 | Concealed Magnetic Contact Switch

WARRANTY | One-year warranty

APPLICATION | Installed in the mortise of a hollow metal or aluminum frame and wood, hollow metal or aluminum door

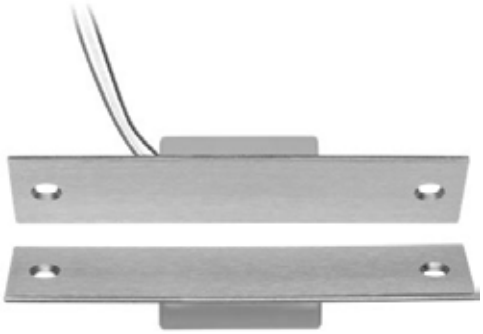

ELECTRICAL SPECIFICATIONS
Contact: | SPDT, 50mA @ 30 VDC

MECHANICAL SPECIFICATIONS
Gap: | 0.125" (3 mm)

Faceplate:
- 4.875" (h) x 1.25" (w) x 0.125" (d)
- 123.83 mm (h) x 31.75 mm (w) x 3.18 mm (d)

MODELS
2-679-0626 | Magnetic Switch

WARRANTY | One-year warranty

APPLICATION
- Ideal for door status monitoring
- Easily installed in hollow metal and aluminum doors and frames

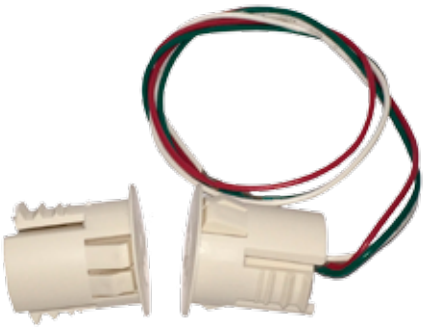

ELECTRICAL SPECIFICATIONS
Contact: | SPDT, 50mA @ 30 VDC

MECHANICAL SPECIFICATIONS
Gap: | 0.5" (12.7 mm)

Power Supply & Door Controllers

The functionality of power supplies differ based on the electrified components and their intended use. In order to have an optimized and properly operational electrified opening, the power supply should fit the opening, not the other way around. Hager offers different power supply solutions for different types of openings.

The 2901 and 2902 are specifically designed to operate electric latch retraction exit devices.

The 2903 is designed to optimize the functionality of Fail Safe or Fail Secure locking devices that interface with the building's alarm controls, card readers, keypads, and other access control systems.

The 2904 is designed to optimize openings that include a locking device and automatic door operator.

The 2908 and 2909 are modular designs that provide functionality for any type of opening whether it is an electric latch retraction exit device, locking devices that interface with other access controls, door operators with sequencing locking devices, or combination of all of those or just something completely different.

POWER SUPPLY & DOOR CONTROLLERS - 2911

MODELS
2911 — 6A Modular Power Supply

WARRANTY — One-year warranty

DESCRIPTION
- Modular design allows customization of each power supply
- Equipped with a high performance transformer and highly reliable electronic components
- Filtering and output voltage regulation provides protection and ensures the longevity of all system components

FEATURES
Components:
- Output filtering stabilizes the DC output voltage and eliminates AC line noise
- Regulator maintains output voltage at 12 or 24 VDC regardless of load changes and battery charging
- Fire alarm input that provides simultaneous release of all Fail Safe/Fail Secure locks and door holders in case of an emergency
- Field selectable output that provides 12 VDC or 24 VDC
- Circuit breaker protected AC input voltage - secondary output is PTC protected
- LED status indicators Separate PTC protected charging output
- Optional dual 12 VDC or 24 VDC outputs

ELECTRICAL SPECIFICATIONS

Input:
- 800mA @ 115 VAC, 50/60Hz
- 230 VAC optional

Output:
- 12/24 VDC, 2A
- Class 2

Battery Charger: 13.5/27 VDC, 500 mA

LED INDICATORS

Amber: AC and DC voltages are OK
Green: No DC output
Red: No AC input, powered by batteries

MECHANICAL SPECIFICATIONS

Dimensions:
- 12" x 12" x 4", 18 GA (305 x 305 x 102 mm)
- 20 gauge steel

ACCESSORIES

ELR
- 2-679-0661 - 5 Amp hour battery backup
- 2-679-0662 - 12 VDC output regulator module
- 2-679-0664 - Universal Relay Module
- 2-679-0703 - Sequencer Module
- 2-679-0704 - Access Control Module
- 2-679-0705 - 16 Amp Power Boost Module
- 2-679-0706 - Power Supply Monitor Module

POWER SUPPLY & DOOR CONTROLLERS - 2910

MODELS
2910 — 4A Modular Power Supply

WARRANTY — One-year warranty

DESCRIPTION
- Modular design allows customization of each power supply
- Equipped with a high performance transformer and highly reliable electronic components
- Filtering and output voltage regulation provides protection and ensures the longevity of all system components

FEATURES
Components:
- Output filtering stabilizes the DC output voltage and eliminates AC line noise
- Regulator maintains output voltage at 12 or 24 VDC regardless of load changes and battery charging
- Fire alarm input that provides simultaneous release of all Fail Safe/Fail Secure locks and door holders in case of an emergency
- Field selectable output that provides 12 VDC or 24 VDC
- Circuit breaker protected AC input voltage - secondary output is PTC protected
- LED status indicators Separate PTC protected charging output
- Optional dual 12 VDC or 24 VDC outputs

ELECTRICAL SPECIFICATIONS

Input:
- 800mA @ 115 VAC, 50/60Hz
- 230 VAC optional

Output:
- 12/24 VDC, 2A
- Class 2

Battery Charger: 13.5/27 VDC, 500 mA

LED INDICATORS

Amber:	AC and DC voltages are OK
Green:	No DC output
Red:	No AC input, powered by batteries

MECHANICAL SPECIFICATIONS

Dimensions:
- 12" x 12" x 4", 18 GA (305 x 305 x 102 mm)
- 20 gauge steel

ACCESSORIES

ELR
- 2-679-0661 - 5 Amp hour battery backup
- 2-679-0662 - 12 VDC output regulator module
- 2-679-0664 - Universal Relay Module
- 2-679-0703 - Sequencer Module
- 2-679-0704 - Access Control Module
- 2-679-0705 - 16 Amp Power Boost Module
- 2-679-0706 - Power Supply Monitor Module

POWER SUPPLY & DOOR CONTROLLERS - 2909

MODELS
2909 — 2A Modular Access Control Power Supply

WARRANTY — One-year warranty

APPLICATION
- Modular design allows customization of each power supply
- Regulated modular access control power supply
- Equipped with a high performance transformer and highly reliable electronic components
- Filtering and output voltage regulation provide protection and ensure the longevity of all system components

FEATURES
Components:
- Output filtering stabilizes the DC output voltage and eliminates AC line noise
- Regulator maintains output voltage at 12 or 24 VDC regardless of load changes and battery charging
- Fire alarm input that provides simultaneous release of all Fail Safe/Fail Secure locks and door holders in case of an emergency
  - *Provides simultaneous release of all Fail Safe/Fail Secure locks and door holder in case of emergency*
- Circuit breaker protected AC input voltage - secondary output is PTC protected
- LED status indicators separate PTC protected charging output
- Optional dual 12 VDC or 24 VDC outputs

ELECTRICAL SPECIFICATIONS
Input:
- 800mA @ 115 VAC, 50/60Hz
- 230 VAC optional

Output:
- 12/24 VDC, 2A
  - *field selectable*
- Class 2

Battery Charger: 13.5/27 VDC, 500 mA

LED INDICATORS
Amber: AC and DC voltages are OK
Green: No DC output
Red: No AC input, powered by batteries

MECHANICAL SPECIFICATIONS
Dimensions:
- 4" (102 mm) W x 12" (305 mm) H x 12" (305 mm) D
- 12 gauge steel

NOTES
ELR
- Not suitable for use with solenoid actuated Electric Latch Retraction (ELR) exit devices
- Suitable for motor driven ELR exit devices

POWER SUPPLY & DOOR CONTROLLERS - 2908

MODELS
2908 — 1A Modular Access Control Power Supply

WARRANTY — One-year warranty

APPLICATION
- Modular design allows customization of each power supply
- Regulated modular access control power supply
- Equipped with a high performance transformer and highly reliable electronic components
- Filtering and output voltage regulation provide protection and ensure the longevity of all system components

FEATURES
Components:
- Fire alarm input
  - *Provides simultaneous release of all Fail Safe/Fail Secure locks and door holder in case of emergency*
- Circuit breaker protected AC input voltage - secondary output and battery backup status
- Separate PTC protected charging output
- Optional dual 12 VDC or 24 VDC outputs
- Standard California compliant manual release

ELECTRICAL SPECIFICATIONS
Input:
- 600mA @ 115 VAC, 50/60Hz
- 230 VAC optional

Output:
- 12/24 VDC, 1A
  - *Field selectable*

Battery Charger: 13.5/27 VDC, 500 mA

MECHANICAL SPECIFICATIONS
Dimensions:
- 4" (102 mm) W x 12" (305 mm) H x 12" (305 mm) D
- 12 gauge steel

ACCESSORIES
2-679-0661
- 5 Amp hour battery backup
  - *Uses a separate, protected output for charging - includes a low battery disconnect that protects the battery from potential damage during extended battery powered situations*
  - *When multiple batteries are used, install in parallel to increase current, or install in series to increase voltage. For more information, please contact Hager Tech Support.*

2-679-0662
- 12 VDC Output Regulator Module
  - *Enables dual 12V and 24V output*

2-679-0664
- Universal Relay Module
  - *Multiple field selectable operational modes for up to two door stations*

NOTES
ELR
- Not suitable for use with solenoid actuated Electric Latch Retraction (ELR) exit devices
- Suitable for motor driven ELR exit devices

POWER SUPPLY & DOOR CONTROLLERS - 2908 & 2909 MODULES

MODELS 2-679-0661	5 Amp hour battery backup
WARRANTY	One-year warranty
APPLICATION	Allows continued operation of your access controlled opening upon power failure

---

MODELS 2-679-0662	12 VDC Output Regulator Module
WARRANTY	One-year warranty
APPLICATION	Allows for dual voltage output applications where openings require a 12VDC and 24VDC

ELECTRICAL SPECIFICATIONS

Input:	24 VDC
Output:	500A @12 VDC

MODELS 2-679-0664	Universal Relay Module
WARRANTY	One-year warranty
APPLICATION	• Conventional Relay (CR) • Dual Conventional Relay (2x CR) • Time Delay Relay (TD) (1-60sec) • Dual Time Delay Relay (2x TD) (1-60sec) • Latching Relay (LR) - Separate Latch and Relase Inputs • Dual Latching Relay (2x LR) Pulse on Pulse off • Time Delay x Latching Relay • Interlock A (Air Lock) • Interlock B (2 Modules Required)

ELECTRICAL SPECIFICATIONS

Input:	120/175mA @ 12/24 VDC
Output: Wet Dry	2 each field selectable wet or dry 120/175mA@ 12/24 VDC SPDT, Dry 10A @ 30 VDC

MODELS 2-679-0703	Electric Latch Retraction Sequencer Module
WARRANTY	One-year warranty
APPLICATION	Allow for sequencing of electrified hardware on openings with Auto Operator

ELECTRICAL SPECIFICATIONS

Input:	12 VDC or 24 VDC (+/- 10%) - 140 mA max
Exit & Operator Contacts:	N/C or N/O, field selectable 10 AMP @ 30 VDC (Resistive)
Access Control Inputs:	N/O Dry Contact

POWER SUPPLY & DOOR CONTROLLERS - 2908 & 2909 MODULES

MODELS
2-679-0704 — Access Control Module

WARRANTY — One-year warranty

APPLICATION — Installer friendly relay board used to control and monitor openings

ELECTRICAL SPECIFICATIONS

Input:
- 75mA@ 12/24 VDC
- 3 - N/C Normally Closed Inputs
- 3 - N/O Normally Open Inputs

Output:
- 5 Amp (Resistive) fail safe lock output
- 5 Amp (Resistive) fail secure lock output
- Lock status: SPDT (Form C) dry contact

MODELS
2-679-0705 — 16 Amp Power Boost Module

WARRANTY — One-year warranty

APPLICATION — Used for electric latch retraction exit devices that require 24 VDC with 16 amp inrush

ELECTRICAL SPECIFICATIONS

Input:
- 85mA @ 24 VDC
- Dry N/O trigger input ONLY

Output:
- 16A surge
- 1A continuous

Note: **Works with Hager 2909 Power Supply**

MODELS
2-679-0706 — Power Supply Monitor Module

WARRANTY — One-year warranty

APPLICATION — Provides outputs to monitor Hager 2909 power supply status and A/C power and DC output/battery status

ELECTRICAL SPECIFICATIONS
- 2 SPDT 1 amp repay outputs
- On/off status

Note: **Works with Hager 2909 Power Supply ONLY**

POWER SUPPLY & DOOR CONTROLLERS - 2904

MODELS
2904 — MLR & Auto Operator Access Control Power Supply

WARRANTY — One-year warranty

APPLICATION — Provides power and control for openings with an electrified locking device and automatic door operator

FEATURES
Components:

- Filtered and regulated 24 VDC output
- 2A load capacity
- Class 2 rated outputs
- Overload, over voltage, and short circuit protection
- Automatically accepts 120 or 240 VAC input
- Built in fail safe or fail secure locking device controller
- Built in dry contact output for automatic door operator input
- Auxiliary 24 VDC constant voltage output (1 amp max output)
- Separate input for activation switch on entry and exit side of opening
- Fire alarm input
- Adjustable time delay

ELECTRICAL SPECIFICATIONS

Input: 900mA @ 120 VAC, 60Hz
600mA @ 240 VAC, 50/60Hz

Output: 24 VDC, 2A

MECHANICAL SPECIFICATIONS

Dimensions: 4-1/4" (108 mm) W x 10-1/4" (260 mm) H x 10-1/4" (260 mm) D

NOTES
ELR

- Not suitable for use with solenoid actuated Electric Latch Retraction (ELR) exit devices
- Suitable for motor driven ELR exit devices

POWER SUPPLY & DOOR CONTROLLERS - 2903

MODELS
2903 — Access Control & Locking Device Power Supply

WARRANTY — One-year warranty

APPLICATION — For use with Fail Safe and Fail Secure locking devices that interface with building alarm controls, card readers, keypads, and other door controls

FEATURES
Components:
- Filtered and regulated 24 VDC output
- 2A load capacity
- Class 2 rated outputs
- Overload, over voltage, and short circuit protection
- Automatically accepts 120 or 240 VAC input
- Built in fail safe or fail secure locking device controller
- Surge suppression on fail safe and fail secure outputs
- Interface relay isolates locking device outputs from control switch
- Adjustable time delay

ELECTRICAL SPECIFICATIONS
Input:
- 900mA @ 120 VAC, 60Hz
- 600mA @ 240 VAC, 50/60Hz

Output: 24 VDC, 2A

MECHANICAL SPECIFICATIONS
Dimensions: 4-1/4" (108 mm) W x 10-1/4" (260 mm) H x 10-1/4" (260 mm) D

NOTES
ELR
- Not suitable for use with solenoid actuated Electric Latch Retraction (ELR) exit devices
- Suitable for motor driven ELR exit devices

POWER SUPPLY & DOOR CONTROLLERS - 2902

MODELS
2902 — Electric Latch Retraction Controller & Power Supply with Day/Night Mode

WARRANTY — One-year warranty

APPLICATION — For use with Hager's 4500 Series Electric Latch Retraction (ELR) exit devices in a day/night mode of operation

FEATURES
Components:
- Auxiliary 12 and 24 VDC outputs
- Built-in dry contact output for automatic door operator input
- Adjustable time delay
- Fire alarm input
- Operator day/night mode of operation

ELECTRICAL SPECIFICATIONS
Input: 750mA @ 120 VAC; 60Hz

Output:
- 250mA @ 12.6-16.5 VDC; Unregulated & Unfiltered
- 250mA @ 26.7-28.0 VDC; Unregulated & Unfiltered

MECHANICAL SPECIFICATIONS
Dimensions: 4-1/4" (108 mm) W x 10-1/4" (260 mm) H x 10-1/4" (260 mm) D

POWER SUPPLY & DOOR CONTROLLERS - 2901

MODELS
2901 — Electric Latch Retraction Controller & Power Supply

WARRANTY — One-Year Warranty

APPLICATION — For use with Hager's 4500 Series Electric Latch Retraction (ELR) exit devices

FEATURES

Components:
- Auxiliary 12 and 24 VDC outputs
- Built-in– dry contact output for automatic door operator input
- Adjustable time delay
- Fire alarm input
- Single or dual system latch retraction

ELECTRICAL SPECIFICATIONS

Input: 750mA @ 120 VAC; 60Hz

Output:
- 250mA @ 12.6-16.5 VDC; Unregulated & Unfiltered
- 250mA @ 26.7-28.0 VDC; Unregulated & Unfiltered

MECHANICAL SPECIFICATIONS

Dimensions: 4-1/4" (108 mm) W x 10-1/4" (260 mm) H x 10-1/4" (260 mm) D

8400 Series
Low Energy Power Operator

As more and more buildings are becoming ADA compliant, more options need to be made available. Hager's low energy operators allow you to do just that without a long list of part numbers to keep track of. Instead, Hager's low energy operators are customizable so that you can meet your customer's requirements and expectations each and every time.

The 8400 Series is Hager's premium low energy operator that reduces installation costs by being designed in a unique way that allows for one person installation and each unit includes an on-board programmer so that the installer programs one unit and then uses a flash drive to set up the other units in the same way with the same functionality.

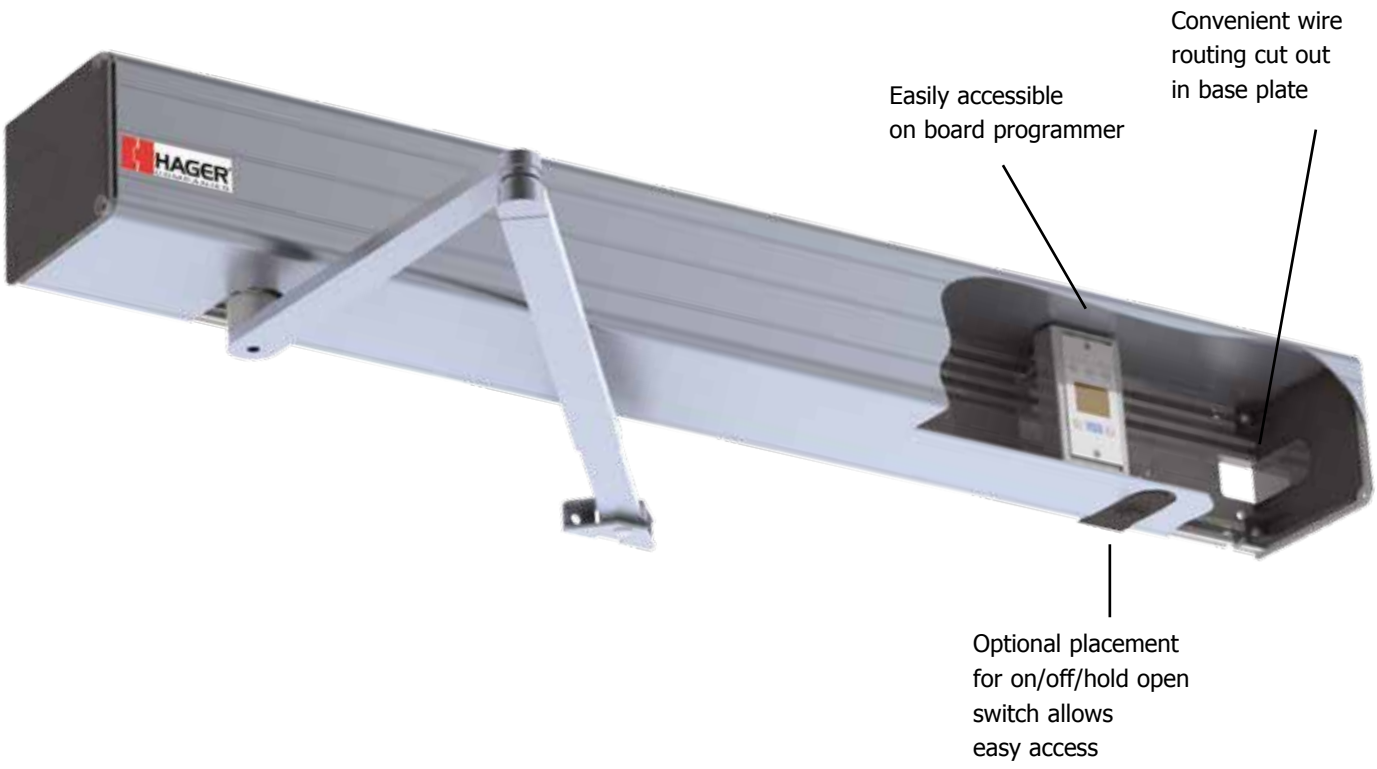

LOW ENERGY POWER OPERATOR COMPONENT SELECTION

1 Low Energy Power Operators

8400 Series - (Pages 54-61)
Premium Low Energy Power Operator
- Single Operator
- Paired Operator
- Double Egress Operator
- Single Operator Paired with
- Mechanical Closer

8200 Series - (Pages 67-69)
Economy Low Energy Power Operator
- Single Operator
- Double Egress Operator

2 Parts & Accessories

8400 Series - (Pages 63-65)
- Track Arm
- Standard Arm
- Standard Arm - Double Egress
- Track Arm - Double Egress
- Replacement Spindle

8200 Series (Pages 71-73)
- Standard Arm
- Standard Arm - Double Egress
- Track Arms

Replacement Spindle 20 mm

Replacement Spindle 35 mm

Replacement Spindle 50 mm

Standard Arm

Track Arm - Double Egress

Track Arm

Standard Arm - Double Egress

3 Actuators (Pages 75-84)
- 4.5" Square Actuator
- 6" Square Actuator
- 4.5" Round Actuator
- 6" Round Actuator
- 1.5" x 4.75" Jamb Actuator
- 36" Low Profile Actuator
- 4.75" Vestibule Actuator
- Bollard Posts

Square Actuator

Round Actuator

1.5" x 4.75" Jamb Actuator

4.75 Vestibule Actuator

36" Low Profile Actuator

Touchless Square Actuator

Touchless Round Actuator

Bollard Posts

4 Accessories (Pages 85-87)
- 433 MHz Receiver
- 3-Volt Wireless Transmitter
- 9-Volt Wireless Transmitter
- Wireless, One Button Transmitter
- Programmable Relay and Door Sequencer

Programmable Relay and Door Sequencer

3-Volt Wireless Transmitter

Wireless, One Button Transmitter

433 MHz Receiver

9-Volt Wireless Transmitter

8400 SERIES LOW ENERGY POWER OPERATOR - STANDARD APPLICATIONS

Hager Companies 8400 Series Low Energy Power Operator meets ANSI/BHMA A156.19 standards for power assist and low energy operators and is designed to meet the requirements of door openings that occasionally have the need for an automatic opening. These devices can be used on single and double doors including double egress applications. This door opening solution provides a consistent closing and opening of the door, which is especially beneficial in situations that require compliance with the Americans with Disabilities Act (ADA). The use of Hager's Low Energy Power Operator provides easy access for not only people with disabilities, but also allows for manual operation of the door when necessary.

The 8400 Series is designed for ease of installation, allowing it to be installed by a single person. It also provides a quiet, smooth operation preventing any unwanted noise in the opening and surrounding area. The use of a digital display makes programming the operator uncomplicated and provides a resourceful tool for maintaining the device and assessing its status.

In addition to the Low Energy Power Operator, Hager offers a full range of actuators to be used in conjunction with the operator. The switches available for activation of the operator come in a variety of sizes and options, including wireless and hard wired. Hager also offers an option that exceeds the California Building Code, Section 1117B.6 by providing a push plate that meets height, reach range, and operation requirements for those with disabilities.

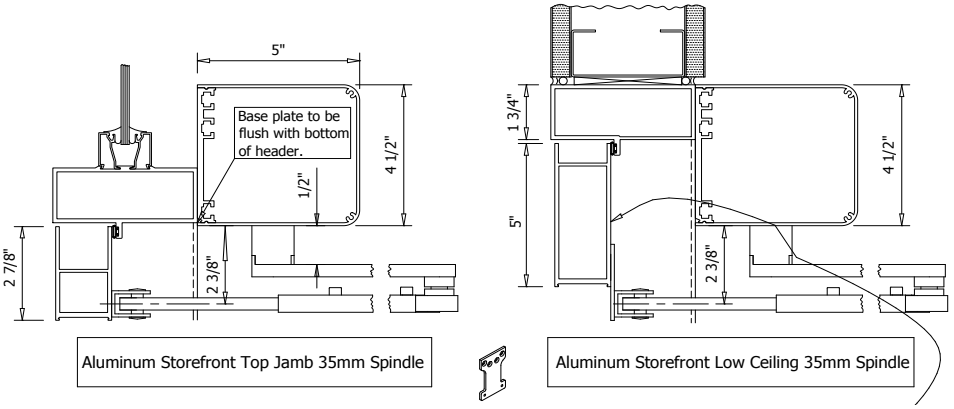

Aluminum Storefront Top Jamb 35mm Spindle

Aluminum Storefront Low Ceiling 35mm Spindle

Note: Optional arm shoe drop plate is available for applications with a top rail less than 5". See page 9 for additional information.

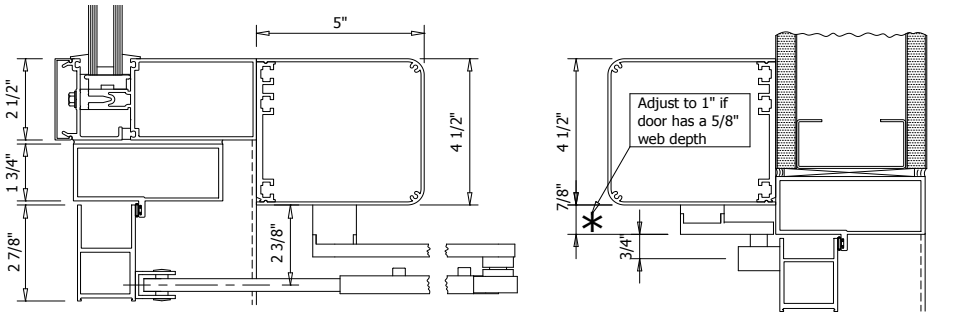

Aluminum Curtain Wall Sub Framing 35mm Spindle

Aluminum Storefront Pull Side 20mm Spindle

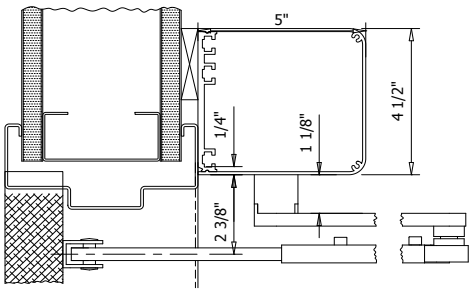

Hollow Metal Top Jamb Push 35mm Spindle

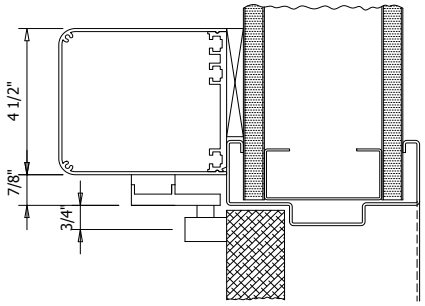

Hollow Metal Pull Side 20mm Spindle

SINGLE OPERATOR

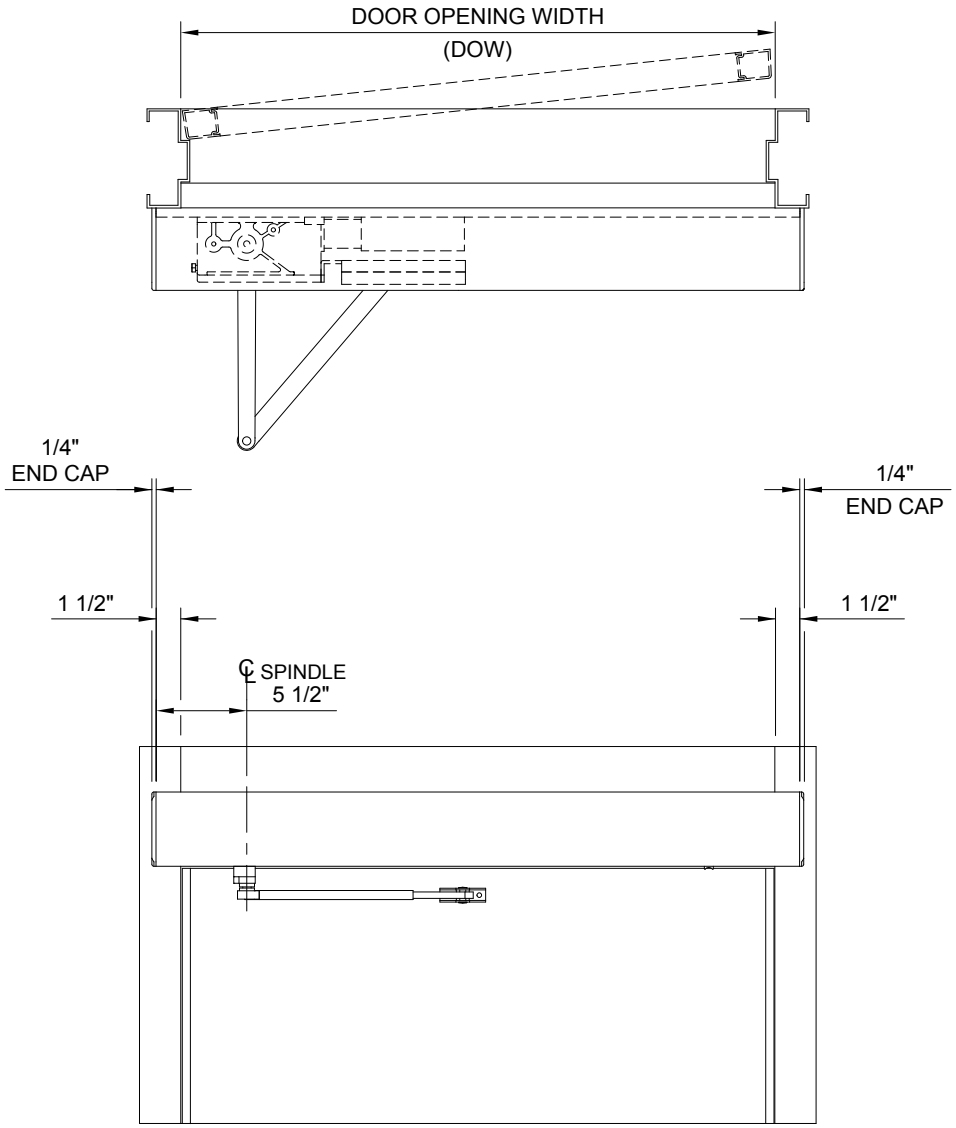

8400 SERIES LOW ENERGY POWER OPERATOR - STANDARD APPLICATIONS

PAIRED OPERATOR

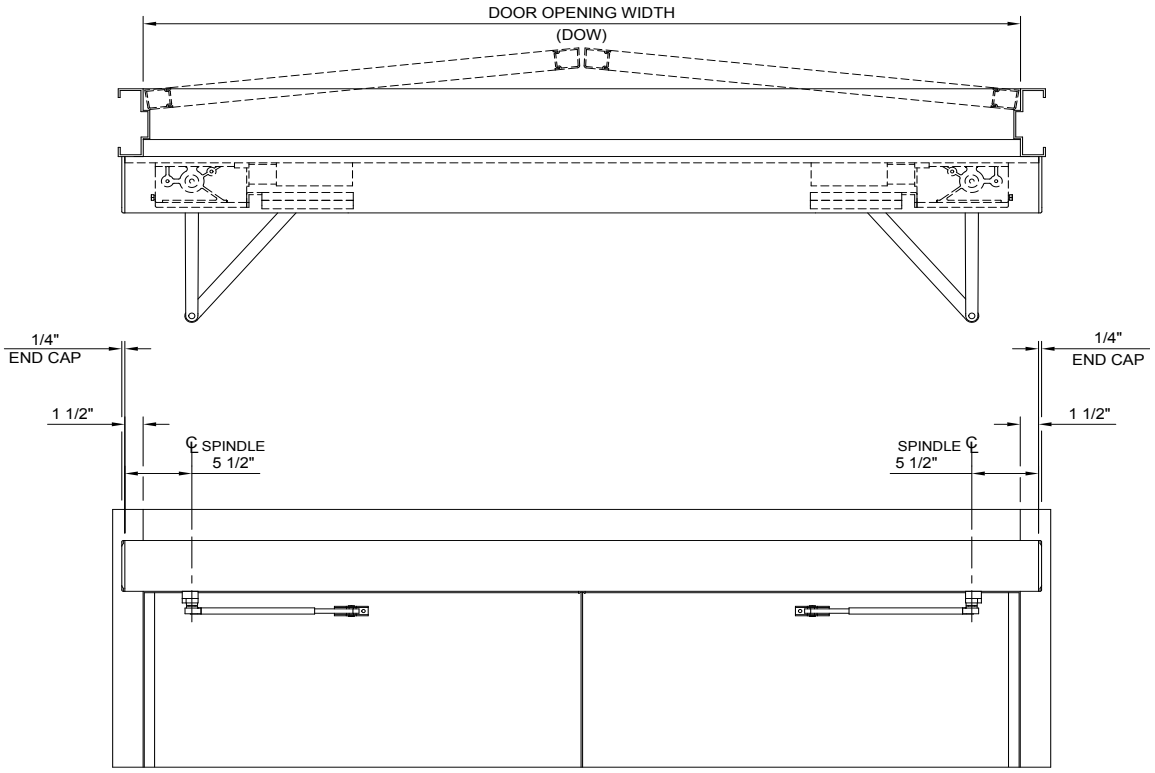

DOUBLE EGRESS OPERATOR

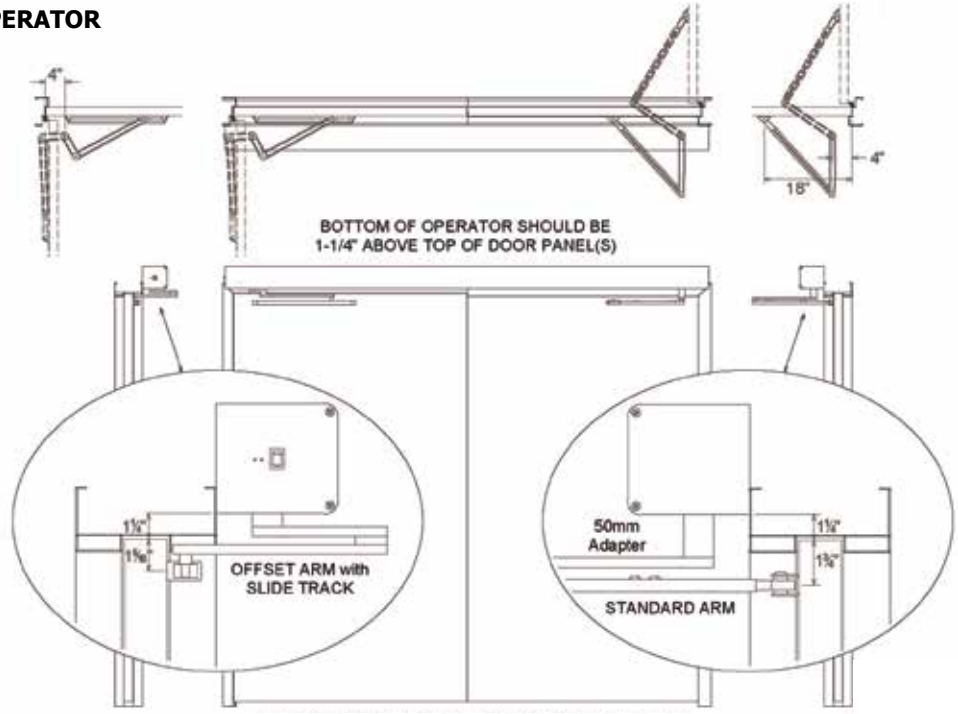

8400 SERIES LOW ENERGY POWER OPERATOR - STANDARD APPLICATIONS

SINGLE OPERATOR PAIRED WITH MECHANICAL CLOSER

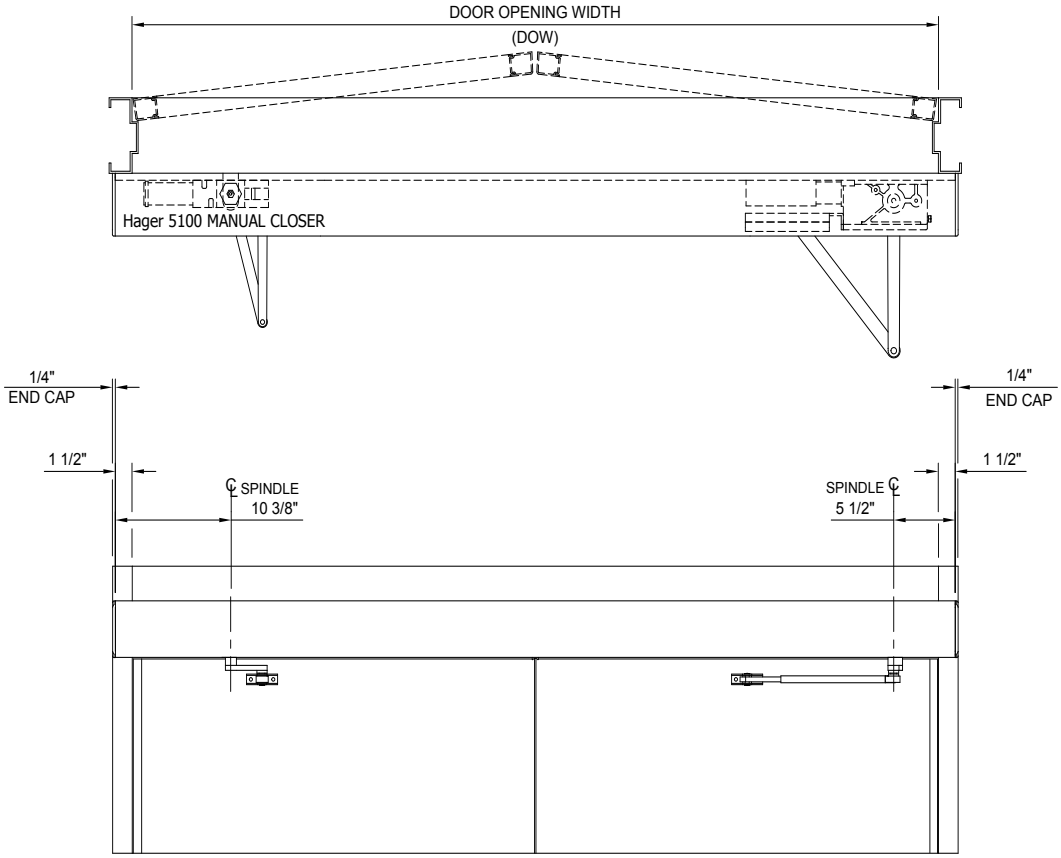

OPERATOR HANDING IDENTIFICATION

PUSH SIDE MOUNTING WITH STANDARD ARM

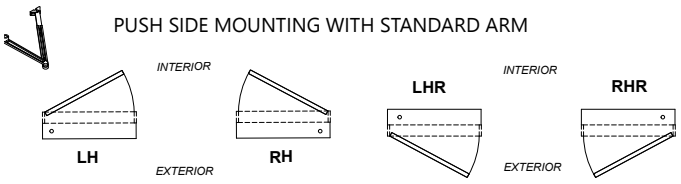

PUSH SIDE MOUNTING WITH STANDARD ARM

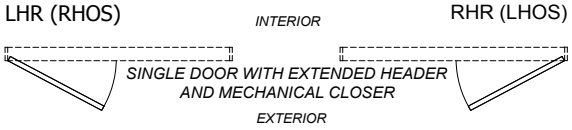

PULL SIDE MOUNTING WITH TRACK ARM

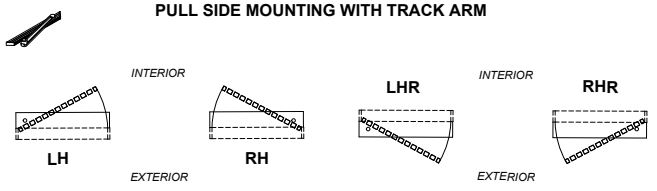

Note: Specify leaf to receive operator.

8400 SERIES LOW ENERGY POWER OPERATOR - PARTS AND ASSEMBLY DETAILS

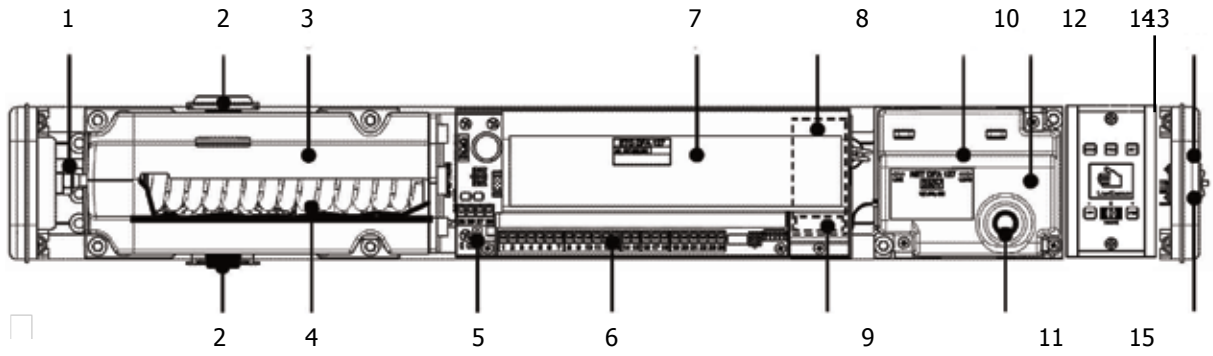

1. Adjusting screw for spring tension
2. Output shafts for arms & stop
3. Drive unit
4. Closing spring
5. Multifunction push button/control
6. Terminal blocks for I/O
7. Microprocessor control
8. Motor drive circuit board
9. Slide switch S1 (rotating direction)
10. Power supply
11. Fuse (2.0A, 5 x 20mm, Slo-Blo)
12. Power supply circuit board
13. Onboard programmer
14. On/Off/Open rocker switch
15. Status LED and reset push button

8400 SERIES LOW ENERGY POWER OPERATOR - HOW TO ORDER

8400 SERIES

84 | **18** | **A** | **36"** | **ALM** | **LH**

Product Group
84 - Low Energy Power Operator

Type
18 - Single Operator
19 - Pair - Simultaneous
20 - Pair - Independent
21 - Pair - Double Egress - Simultaneous
22 - Pair - Double Egress - Independent
23 - Single Operator Paired with
5100 Series Mechanical Closer

Application*
A - Push Side of Door
B - Pull Side of Door

Size**
36- 36" (single)
72 - 72" (double)

Finish
ALM - Aluminum
DBZ - Dark Bronze

Handing
RHR/LH - Left Hand
LHR/RH - Right Hand

*** Note: Push side of door comes with standard arm. Pull side of door comes with track arm.**
**** Additional sizes available. See page 7 for additional information.**

*** Note: Standard arm (push side, 0" - 4.1875" reveal) included.**

8400 SERIES LOW ENERGY POWER OPERATOR

MODELS

8418	Single Operator (handed)
8419	Simultaneous Pair (2 units, 1 controller, doors operate at the same time) For use with Hager mortise locks with deadbolt
8420	Independent Pair (2 units, 2 controller, doors operate independently from each other)
8421	Double Egress Simultaneous Pair (2 units, 1 controller, doors swing in opposite directions at same time)
8422	Double Egress Independent Pair (2 units, 2 controller, doors swing in opposite directions at different times)
8423	Single operator paired with 5100 Series closer for inactive door (handed)

WARRANTY

Two-year warranty

APPLICATION

- For use on fire-rated and non-fire-rated outswing or inswing doors
- Built-in adjustable door stop for protection against wind or abusive environments
- Operates as a manual closer with or without power

FEATURES

Application Features:

- Single person installation
- Pre-drilled mounting holes for ease of installation
- Three Operating Modes (On/Off/Hold Open)
- Designed for single doors from 36” to 48” (914 mm to 1,219 mm)
- Designed for double doors from 60” to 96” (1,524 mm to 2,438 mm)
- On-board power supply

Operational Functionality:

- Built-in adjustable door stop for protection against wind or abusive environments
- Interfaces with electric door hardware
- Operates as a mechanical closer if power is disconnected
- Obstacle recognition upon opening and closing
- Blow open function for smoke ventilation

Programmable Functionality:

- Boost on Close (selectable On/Off)
- Power Assist Close
- Power Boost Close - motor assist under wind and stack pressure
- Motor Hold Close
- Power Open and Hold - for smoke evacuation
- Adjustable Opening Force Limitation
- Adjustable Opening and Closing Speeds
- Adjustable Opening Angle
- Adjustable Hold Open Time for Door Activators (1 sec to continuous)
- Sequential Operation (push to open/push to close operation)
- Built-In Stop - Manual swing to 180°/ Power swing to 100°
- Fire Alarm input shunts swing activations until FACP is manually reset
- Internal LCD display
- Memory is flash upgradeable

Certification:

- ANSI A156.19 compliant
- UL/cUL Listed for up to 3-hours
- UL10C Listed for Positive Pressure Rating
- ADA compliant

8400 SERIES LOW ENERGY POWER OPERATOR

ELECTRICAL SPECIFICATIONS

Power Requirements:	115 VAC 60 HZ
Current Draw:	3A
Auxiliary Output Voltage:	500mA @ 24 VDC
Fuse Type:	2.0A, 5 x 20mm, Slo-Blo
Electric Lock Relay Type:	Form "C" SPDT
Lock Relay Rating:	5.0A @ 28 VDC
Operating Temperature:	-40° to 140° F (-40° to 160° C) ambient operating temperature in all climatic conditions

MECHANICAL SPECIFICATIONS

Dimensions:	5" H x 4-1/2" W x door width +3" L (127 mm x 114 mm)
Reveal:	Up to 12" standard
Spring Adjustment:	5 lbs to 20 lbs closing force
Max Degree of Swing:	180°
On/Off/Hold Open Switch:	Standard
Swing Direction:	Inswing/Outswing
Adjustable Swing Degree:	80° to 180°

FINISHES

ALM	Aluminum anodized (standard)
DBZ	Dark bronze anodized

NOTES

Must specify push or pull side mount
Specify handing

In this section, you can find the various arms and spindles for the 8400 Series operator.

2-659-0151 | 2-659-0152
Track Arm
- 20 mm spindle
- For use on pull side of the door
- 2-659-0151 is ALM, 2-659-0152 is DBZ

2-659-0153 | 2-659-0154
Standard Arm
- 35 mm spindle
- For use on push side of the door
- 2-659-0153 is ALM, 2-659-0154 is DBZ

2-659-0220 | 2-659-0221
Standard Arm - Double Egress
- 50 mm spindle
- For use on push side of the door
- 2-659-0220 is ALM, 2-659-0221 is DBZ

2-659-0222| 2-659-0223
Track Arm - Double Egress
- 20 mm spindle
- Offset adaptor
- For use on pull side of the door
- 2-659-0222 is ALM, 2-659-0223 is DBZ

2-659-0224 | 2-659-0225
Replacement Spindle
- 20 mm
- For use with delayed egress or track arm assembly
- 2-659-0224 is ALM, 2-659-0225 is DBZ

2-659-0226 | 2-659-0227
Replacement Spindle
- 35 mm
- For use with standard single and standard pair applications
- 2-659-0226 is ALM, 2-659-0227 is DBZ

2-659-0228 | 2-659-0229
Replacement Spindle
- 50 mm
- For use with push side standard arm - double egress only
- 2-659-0228 is ALM, 2-659-0229 is DBZ

ACCESSORIES

2-659-0230 | 2-659-0231
Drop Plate
- For use with low ceiling clearance
- 2-659-0230 is ALM, 2-659-0231 is DBZ

2-659-0236
Power Supply
- On-board replacement
- Power requirements: 115 VAC 60 Hz
- Output Voltage: 24 VDC 500mA

2-659-0232 | 2-659-0233
Cover for Single Operator
- 36" length - contact Hager Tech Support for special sizes
- Powder coated
- Anodized aluminum
- 2-659-0232 is ALM, 2-659-0233 is DBZ

2-659-0234 | 2-659-0235
Cover for Dual Operators
- 72" length - contact Hager Tech Support for special sizes or 8423 cover
- Powder coated
- Anodized aluminum
- 2-659-0234 is ALM, 2-659-0235 is DBZ

Note: For additional replacement parts contact Hager Tech Support.

8200 Series
Low Energy Power Operator

The 8200 Series is Hager's economy low energy power operator. The modular platform allows installers to order the features they need.

8200 SERIES LOW ENERGY POWER OPERATOR - HOW TO ORDER

8200 SERIES

82 **18** **O** **31"** **ALM**

Type
18 - Single Operator
19 - Simultaneous Pair
22 - Double Egress Simultaneous Pair

Size
31- 31.5”
51 - 51.5”

Finish
ALM - Aluminum
DBZ - Dark Bronze

Default

Product Group
82 - Economy Low Energy Power Operator

8200 SERIES LOW ENERGY POWER OPERATOR

MODELS

8218	Single Operator
8219	Simultaneous Pair
8221	Double Egress Simultaneous Pair

WARRANTY

One-year warranty

APPLICATION

- For use on interior and exterior non-fire-rated outswing or inswing doors with butt hinges, offset pivots and center pivots
- On-board provisions for door status, battery backup and additional modules

FEATURES

- Operates as a manual closer with or without power

Application Features:

- Non-Handed
- Three Operating Modes (On/Off/Hold Open)
- Designed for doors up to 48" wide (1219 mm)
- Designed for doors up to 275 lbs. (125 Kg)

Operational Functionality:

- Power Open Spring Close
- 1/4+ HP DC Motor
- Motor Protection Circuit - interrupts motor when there is an obstruction during opening

Certification:

- ANSI A156.19 compliant
- ANSI/UL 325 listed for both United States and Canada
- ADA compliant

Optional Programming and Features:

Modular design allows for additional optional modules to be installed to fit any application

- *Control over electrified door hardware including electric strikes, magnetic lock or motorized latch retraction (MLR)*
- *Sequencing of multiple doors in vestibule applications*
- *Programming changes to extend Hold Open Times, Push and Go, Boost to Close and more*

- See 8200 Accessories for additional information

ELECTRICAL SPECIFICATIONS

Power Supply: On-board 24VDC output for accesories

Operating Temperature: +5° to 125° F (-15° to 50° C) ambient operating temperature in all climatic conditions

MECHANICAL SPECIFICATIONS

Dimensions:

- Single: 4-9/16" H x 5" W x 31-1/2" L (116 mm x 127 mm x 800 mm)
- Pair: 4-9/16" H x 5" W x 75-1/2" L (116 mm x 127 mm x 1816 mm)

Standard Header Lengths:

- Single: 31.5" (800 mm)
- Single: 39.5" (1003 mm)
- Pair: 75.5" (1918 mm) up to 101.5" (2578 mm)
- Custom sizes up tp 101.5" (2578 mm) available

Reveal:

- 0"-9.75" outswing
- 0"-6" Inswing

Opening Angles - Outswing: Adjustable (0-110 degrees)

Opening Angles - Inswing: Adjustable (0-110 degrees); Deep Reveal Arm Maximum (90 degrees)

FINISHES

ALM	Aluminum anodized (standard)
DBZ	Dark bronze anodized

In this section, you can find the various arms and spindles for the 8200 Series operator.

8200 SERIES PARTS & ACCESSORIES - MODULES

2-659-0275

- Exterior Door Module (EDM) for 8200 Auto Operator
- Provides On-Board 1.5A @ 24VDC Output for an Electric Strike, Magnetic Lock or Motorized Latch Retraction (MLR) Exit Device with (0.2 – 4.0s) delay
- Requires iMotion programmer (2-659-0280)
- Allows for daylight operation

2-659-0276

- Multiple Door Module (MDM-B) for 8200 Auto Operator
- Allows for operation of double leaved doors

2-659-0275

Programmer:

2-659-0277 — Programming Interface Module (PIM) for 8200 Auto Operator

2-659-0280 — iMotion Programmer w/ 6' Cord

2-659-0277

Battery Backup:

2-659-0278 — Battery Backup with Interface Cable for 8200 Auto Operator
Note: 33" minimum header length on singles, and 36" for pairs

2-659-0279 — Battery Backup Extension Harness for 8200 Auto Operator

2-659-0280

Programmable Functionality:

- Push and Pull (selectable On/Off)
- Power Assist Close
- Power Boost Close - motor assist under wind and stack pressure
- Motor Hold Close
- Power Open and Hold - for smoke evacuation
- Adjustable Opening Force Limitation
- Adjustable Opening and Closing Speeds
- Adjustable Opening Angle
- Adjustable Hold Open Time for Door Activators (0 - 60 sec.)
- Sequential Operation (push to open/push to close operation)
- Built-In Safety Circuit w/ Stall/Carpet/Safety Slow/Reactivation
- Stall: when door is in motion, most commonly used with pull side door mounted sensor, the door stops before contact is made.
- *Carpet: used with an over head presence sensor, keeps a closed door closed and an open door open*
- *Safety slow: used with a door mounted sensor on pull side, opens the door very slow*

8200 SERIES PARTS & ACCESSORIES

Arm & Assemblies

2-659-0287 Push Side Arm Door Assembly (0 - 4.1875" reveal) CLR (standard arm)
2-659-0288 Push Side Arm Door Assembly (0 - 4.1875" reveal) BLK (standard arm)
2-659-0289 Push Side Arm Door Assembly (4.125 - 9.875" reveal) CLR
2-659-0290 Push Side Arm Door Assembly (4.125 - 9.875" reveal) BLK
2-659-0291 Double Egress Push Side Arm Door Assembly (0 - 4.1875" reveal) CLR (standard arm)
2-659-0292 Double Egress Push Side Arm Door Assembly (0 - 4.1875" reveal) BLK (standard arm)
2-659-0293 Double Egress Push Side Arm Door Assembly (4.125 - 9.875" reveal) CLR
2-659-0294 Double Egress Push Side Arm Door Assembly (4.125 - 9.875" reveal) BLK
2-659-0295 Pull Side Door Arm and Slide Track (0" reveal) CLR
2-659-0296 Pull Side Door Arm and Slide Track (0" reveal) BLK
2-659-0297 RH Pull Side Deep Reveal Arm and Track (0 - 6" reveal) CLR
2-659-0298 RH Pull Side Deep Reveal Arm and Track (0 - 6" reveal) BLK
2-659-0299 LH Pull Side Deep Reveal Arm and Track (0 - 6" reveal) CLR
2-659-0300 LH Pull Side Deep Reveal Arm and Track (0 - 6" reveal) BLK

Drive Shaft Arms

2-659-0283 2.65" Drive Shaft Arm (double egress/deep reveal)
2-659-0284 3.22" Drive Shaft Arm (standard in & out)
2-659-0285 3.94" Drive Shaft Arm (special applications)
2-659-0286 4.84" Drive Shaft Arm (double egress out)
2-659-0319 Drive Shaft Arm Removal Tool

Actuators

Actuators are what allow the "knowing act" of a low energy operator. Hager offers various styles and types of actuators that will appeal to every installation. The typical 4.5" and 6" square or round actuators are available along with Hager's line of jamb operators. For more unique installations or installations with wheelchair traffic, refer to the low profile actuators that can be activated in a 36" range from ground up.

LOW ENERGY POWER OPERATOR ACTUATORS - TOUCHLESS ACTUATORS

MODELS

2-659-0303	6” round with text & handicap logo
2-659-0304	6” round with handicap logo only
2-659-0307	6” round with text only
2-659-0305	4.75” square with text & handicap logo
2-659-0306	4.75” square with handicap logo only
2.659-0308	4.75” square with text only

WARRANTY

One-year warranty

APPLICATION

- For use with ADA low energy power operators
- Employs capacitance technology simliar to smart devices to operate low energy doors
- Ideal installations include medical facilities, assisted living facilities, offices, clean rooms, and schools

FEATURES

- Touchless design reduces the spread of bacteria and germs
- LED illumination increases plate visibility
- Stainless steel faceplate provides durability while also reducing visible deterioration caused by abrasive cleaning agents
- Beveled edges
- Various design options
- Adjustable detection zone
- Audible alert (selectable On/Off)

Certification: NEMA rated

SPECIFICATIONS

Finish:	US32D with text and/or blue logo
Faceplate:	16 gauge, 304 stainless steel
Backplate:	Illuminated Mounting Ring
Input:	30 mA @ 12 to 24 VAC/VDC
Operating Temperature:	-20° to 120°F (-30° to 49°C)
Fasteners:	6-32 x 3/4” mounting screws

LOW ENERGY POWER OPERATOR ACTUATORS - 4.5" SQUARE ACTUATOR

MODELS

2-659-0172	4.5" square with text & handicap logo
2-659-0173	4.5" square with handicap logo only

WARRANTY

One-year warranty

APPLICATION

- For use with ADA low energy power operators
- Ideal installations include medical facilities, assisted living facilities, offices, clean rooms, and schools

FEATURES

- Hard wired (standard) with wireless option
- Embossed graphics ensures durability
- Stainless steel faceplate provides durability while also reducing visible deterioration caused by abrasive cleaning agents
- Beveled edges

Note: for wireless version, must order receiver and transmitter separately

Certification: NEMA rated

SPECIFICATIONS

Finish:	US32D with text and/or blue logo
Faceplate:	16 gauge, 304 stainless steel
Backplate:	1/8" thick aluminum
Cherry Swtich:	Single-pole, 15A/COM/NO/NC contacts
Operating Temperature:	-20° to 120°F (-30° to 49°C)
Fasteners:	6 - 32" x 1" and 8 - 32" x 1" Allen head mounting screws

OPTIONS

2-659-0174

Surface Mount Box for 4.5" Square Actuator
- *Provides adequate space for wireless transmitters*
- *Simplified installation for applications with space limitations*
- *Black finish*

2-659-0241

Universal Backplate
- *For use when mounting actuator to bollard post*
- *Stainless steel finish*

LOW ENERGY POWER OPERATOR ACTUATORS - 6" SQUARE ACTUATOR

MODELS

2-659-0169	6" square with text & handicap logo
2-659-0170	6" square with handicap logo only

WARRANTY

One-year warranty

APPLICATION

- For use with ADA low energy power operators
- Ideal installations include medical facilities, assisted living facilities, offices, clean rooms, and schools

FEATURES

- Hard wired (standard) with wireless option
- Embossed graphics ensures durability
- Stainless steel faceplate provides durability while also reducing visible deterioration caused by abrasive cleaning agents
- Beveled edges

Note: for wireless version, must order receiver and transmitter separately

Certification: NEMA rated

SPECIFICATIONS

Finish:	US32D with text and/or blue logo
Faceplate:	16 gauge, 304 stainless steel
Backplate:	1/8" thick aluminum
Cherry Switch:	Single-pole, 15A/COM/NO/NC contacts
Operating Temperature:	-20° to 120°F (-30° to 49°C)
Fasteners:	6-32 x 1" and 8-32 x 1" Allen head mounting screws

OPTIONS

2-659-0171 — Surface Mount Box for 6" Square Actuator

- *Provides adequate space for wireless transmitters*
- *Simplified installation for applications with space limitations*
- *Black finish*

LOW ENERGY POWER OPERATOR ACTUATORS - 4.5” ROUND ACTUATOR

MODELS

2-659-0165	4.5” round with text & handicap logo
2-659-0166	4.5” round with handicap logo only

WARRANTY

One-year warranty

APPLICATION

- For use with ADA low energy power operators
- Ideal installations include medical facilities, assisted living facilities, offices, clean rooms, and schools

FEATURES

- Hard wired (standard) with wireless option
- Embossed graphics ensures durability
- Stainless steel faceplate provides durability while also reducing visible deterioration caused by abrasive cleaning agents
- Beveled edges

Note: for wireless version, must order receiver and transmitter separately

Certification: NEMA rated

SPECIFICATIONS

Finish:	US32D with text and/or blue logo
Faceplate:	16 gauge, 304 stainless steel
Backplate:	1/8” thick aluminum
Cherry Switch:	Single-pole, 15A/COM/NO/NC contacts
Operating Temperature:	-20° to 120°F (-30° to 49°C)
Fasteners:	6-32 x 1” and 8-32 x 1” Allen head mounting screws

OPTIONS

2-659-0167 Surface Mount Box for 4.5” Round Actuator
- *Provides adequate space for wireless transmitters*
- *Simplified installation for applications with space limitations*
- *Black finish*

2-659-0168 Weather Ring for 4.5” Round Actuator
- *Provides protection against moisture and weather elements*

2-659-0241 Universal Backplate
- *For use when mounting actuator to bollard post*
- *Stainless steel finish*

LOW ENERGY POWER OPERATOR ACTUATORS - 6" ROUND ACTUATOR

MODELS

2-659-0161 — 6" round with text & handicap logo
2-659-0162 — 6" round with handicap logo only

WARRANTY — One-year warranty

APPLICATION

- For use with ADA low energy power operators
- Ideal installations include medical facilities, assisted living facilities, offices, clean rooms, and schools

FEATURES

- Hard wired (standard) with wireless option
- Embossed graphics ensures durability
- Stainless steel faceplate provides durability while also reducing visible deterioration caused by abrasive cleaning agents
- Beveled edges

Note: for wireless version, must order receiver and transmitter separately

Certification: NEMA rated

SPECIFICATIONS

Finish:	US32D with text and/or blue logo
Faceplate:	16 gauge, 304 stainless steel
Backplate:	1/8" thick aluminum
Cherry Switch:	Single-pole, 15A/COM/NO/NC contacts
Operating Temperature:	-20° to 120°F (-30° to 49°C)
Fasteners:	6-32 x 1" and 8-32 x 1" Allen head mounting screws

OPTIONS

2-659-0163 — Surface Mount Box for 6" Round Actuator

- *Provides adequate space for wireless transmitters*
- *Simplified installation for applications with space limitations*
- *Black finish*

2-659-0164 — Weather Ring for 6" Round Actuator

- *Provides protection against moisture and weather elements*

LOW ENERGY POWER OPERATOR ACTUATORS - 1.5" x 4.75" JAMB ACTUATOR

MODELS

2-659-0175	Push to Open text and handicap logo
2-659-0176	Handicap logo only

WARRANTY

One-year warranty

FEATURES

- Hard wired (standard) with wireless option
- Embossed graphics ensures durability
- Stainless steel faceplate provides durability while also reducing visible deterioration caused by abrasive cleaning agents
- Beveled edges

Note: for wireless version, must order receiver and transmitter separately

Certification:

- NEMA rated

SPECIFICATIONS

Finish:	US32D with text and/or blue logo
Faceplate:	16 gauge, 304 stainless steel
Backplate:	1/8" thick aluminum
Cherry Switch:	Single-pole, 15A/COM/NO/NC contacts
Operating Temperature:	-20° to 120°F (-30° to 49°C)
Fasteners:	6-32 x 1" and 8-32 x 1" Allen head mounting screws

OPTIONS

2-659-0177

Surface Mount Box for 1.5" x 4.75" Jamb Actuator

- *Provides adequate space for wireless transmitters*
- *Simplified installation for applications with space limitations*
- *Black finish*

LOW ENERGY POWER OPERATOR ACTUATORS - 36” LOW PROFILE ACTUATOR

MODELS

2-659-0178	Push to Open text and handicap logo - Wireless
2-659-0179	Push to Open text and handicap logo - Hard wired

WARRANTY One-year warranty

APPLICATION

- For use with ADA low energy power operators
- Ideal installations include medical facilities, assisted living facilities, offices, clean rooms, and schools

FEATURES

- Mounts to any flat surface
- Embossed graphics ensures durability
- Stainless steel faceplate provides durability while also reducing visible deterioration caused by abrasive cleaning agents
- Weather resistant
- Beveled edges
- 36” x 36” activation area and low profile 1” depth
- Four separate switches to allow activation from any angle
- Exceeds California Building Code, Section 1117B.6

Certification: NEMA Rated

SPECIFICATIONS

Finish:	US32D with text and/or blue logo
Faceplate:	16 gauge, 304 stainless steel
Backplate:	1/8” thick aluminum
Transmitter Frequencies:	433 MHz
Dimensions:	6” (152 mm) W x 36” (990 mm) H x 1 (25 mm) D
Fasteners:	Due to various mounting types, no fasteners are supplied with the actuator

LOW ENERGY POWER OPERATOR ACTUATORS - 4.75" VESTIBULE ACTUATOR

MODEL

2-659-0242 — Push to Open text and logo

WARRANTY

One-year warranty

APPLICATION

- For use with ADA low energy power operators
- Ideal installations include medical facilities, assisted living facilities, offices, clean rooms, and schools

FEATURES

- Hard wired (standard) with wireless option
- Embossed graphics ensures durability
- 304 grade stainless steel finish - scratch resistant
- Interfaces with 2-659-0187 Programmable Relay and Door Sequencer for automatic sequencing applications
- Conserves energy and provides entrapment protection
- Beveled edges

SPECIFICATIONS

Finish:	US32D with blue text and logo
Faceplate:	16 gauge, 304 stainless steel
Base Material:	1/8" thick aluminum
Cherry Switch:	Single-pole, 15A, COM/NO/NC contacts
Compatible Wireless Frequencies:	433 MHz
Fasteners:	6 - 32" x 1", 8 - 32" x 1" stainless steel

OPTIONS

2-659-0243 — Surface Mount Box for 4.75" Vestibule Actuator

- *Provides adequate space for wireless transmitters*
- *Simplified installation for applications with space limitations*
- *Black finish*

LOW ENERGY POWER OPERATOR ACTUATORS - BOLLARD POST

MODELS

2-659-0180	Black Powder Coat
2-659-0181	Bronze Powder Coat
2-659-0182	Silver Powder Coat

WARRANTY One-year warranty

FEATURES

- For use with Hager's 4.5" square (2-659-0172 | 2-659-0173) and 4.5" round (2-659-0165 | 2-659-0166) actuators
- Can be mounted on existing or newly poured concrete
- UV resistant plastic cap allows for wireless transmissions

SPECIFICATIONS

Material:	Carbon steel
Mounting Bracket:	Stainless steel
Dimensions:	41.5" H x 6.25" W x 4.25" D (with cap attached)
Weight:	35 lbs.
Fasteners:	Screws, expansion anchors, washers and nuts
Note:	Push plates not included - must order separately

Accessories

Accessories can make any ordinary installation unique. Hager offers different wireless transmitters and receivers that are commonly used in executive installations or other highy automated installations.

433 MHz Transmitters and Receiver

2-659-0237
RELAY BOARD
- 24VDC
- Current draw: 40mA
- Contact rating : 5amp/220 VAC or 28VDC DPDT contacts

- Universally compatible with any type of automatic door application
- Used for wireless activation or sequencing of doors
- Receiver can be programmed with up to 100 transmitters
- Activation of transmitter utilizes a rolling code providing a protected signal

MODELS

2-659-0183
433MHz Receiver

2-659-0184
3-Volt Hard Wireless Transmitter (Hardwired to Hager Actuators)

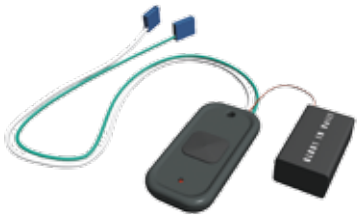

2-659-0185
9-Volt Wireless Transmitter (Hardwired to Hager Actuators)

2-659-0186
Wireless, One Button Transmitter

FEATURES
- Transmitters can be programmed to multiple receivers
- Optional delay - no delay programming
- Toggle or pulse mode selectable by DIP switch
- Red LED on receiver verifies transmission and delivers troubleshooting assistance
- Red LED on transmitter ensures transmission and battery life
- Wire leads plug into terminals on Hager actuators - 2-659-0184 and 2-659-0185

SPECIFICATIONS

Frequency:	433 MHz
Input Voltage:	12 to 24 VAC/VDC
Radio Control Type:	Digital
Emitted Radio Power:	-28.7dBm (transmitter)
Number of Transmitters per Receiver:	100 maximum transmitters
LED Functions:	Red = Relay Activity Blue = Receiver / Transmitter Learn
Dimensions:	Receiver - 2.75" x 2.125" x 1.0" Transmitter - 2.75" x 1.375" x 0.6"
Certifications:	CE, FCC, IC

2-659-0240

Programmable Relay and Door Sequencer

- Provides a single solution for a variety of applications
- Three relays; two 3-AMP and one 1-AMP
- Built-in surge suppression eliminates the need for external components when installing electric locking devices
- Capable of door timing and advanced relay sequencing

FUNCTIONS

FUNCTION	SUBJECT	MOST COMMON APPLICATIONS
10 (MC10)	Simple Timer	Time delay relay
11 (MC11)	Ratchet / Latching	Push to open / Push to close
21 (LE21	Inhibitor with Door Position Input	Automatic swing door with push plate, approach side SuperScan is inhibited when door is closed
22 (LE22)	2 relay Sequence Inhibitor with Door Position Input	Automatic swing door with push plate, approach side SuperScan and Electric Strike. SuperScan is inhibited when door is closed
25 (MC25)	2 Relay Sequence	Automatic swing door with a push plate and electric locking devices
28 (MC28)	2 Relay Sequence with Door Position Input	Automatic swing door with a push plate and electric locking devices with a door position switch to prevent the delay from running during a recycle
29 (MC29)	Relay 1 Deactivation Timer	Automatic swing door or sliding door with an electric locking device and door position switch to prevent lock from reengaging before door closes completely
35 (MC35)	3 Relay Sequence	Two door vestibule with automatic swing doors and single electric locking device
50 (M50)	Interlock Timer with Door Position Inputs	Interlock module that will only allow one door to open at a time and can be used with any automatic or manual door
55 (M55)	Interlock Ratchet with Door Position Inputs	Interlock module that will only allow one door to open at a time with a ratchet / latching function and can be used with any automatic or manual door
65 (M65)	2-Way, 2 Relay Sequence	Two door vestibule sequencing with automatic swing doors traveling in either direction
75 (MC75)	2 Relay Sequence	Automatic swing door with a push plate and electric locking devices

SPECIFICATIONS

Supply Voltage	12 to 24 VAC / DC
Power Consumption	30 to 130 mA; DRY Output
Temperature Range	-15° to 150°F
Dimensions	5.2" x 2.2" x 1.0"
Housing Material	Gray ABS Plastic
Input Specification	1 to 4; DRY Contact
WET Input	5 to 24 VAC / DC
Contact Rating DRY Relay #1 Relay #2 Relay #3	 3A @24VAC / 30VDC 3A @24VAC / 30VDC 1A @24VAC / 30VDC
Contact Rating WET Relay #1	 1A

Note: Functions 10, 11, 50, 55 and 65 are NOT compatible with the WET input.